30063

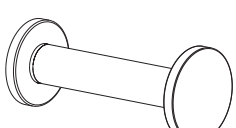

KEUCO GmbH & Co.KG
Oesestr. 36, D-58675 Hemer
Telefon : 02372/904-0
Telefax : 02372/904-236
Internet: www.keuco.de

59509_001
05.2015

KEUCO

Montage
Mounting
Montage
Montage
Montaggio

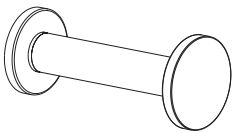
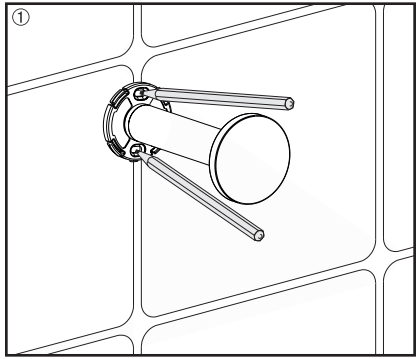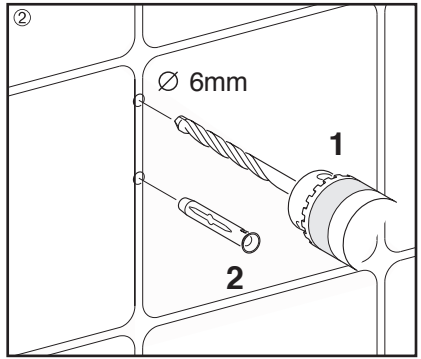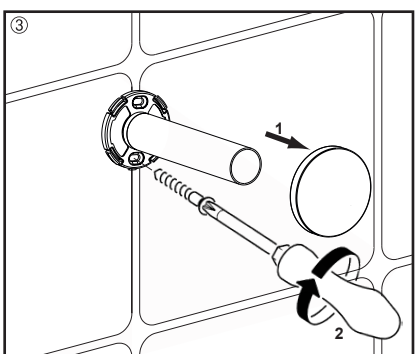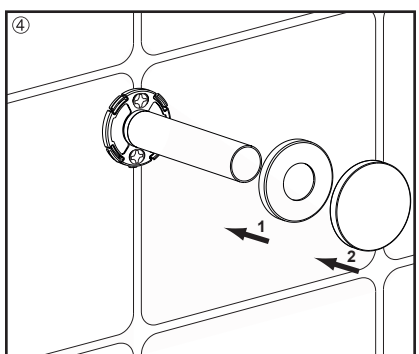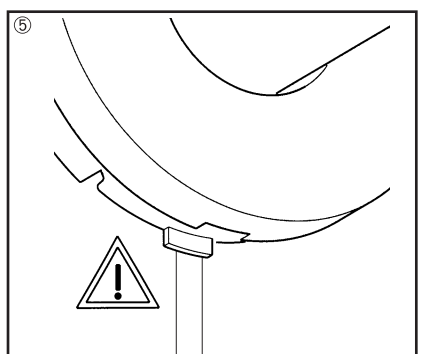
KEUCO