INSTRUCTION MANUAL

IP44 | 220-240V~ 50Hz | Max.ø60mm 2xE-27 Max.40W | 0.5m

Charlois CL 2 Black Smoke
106836

Dijon CL 2 Black Smoke
106839

Reims CL 2 Black Smoke
106842

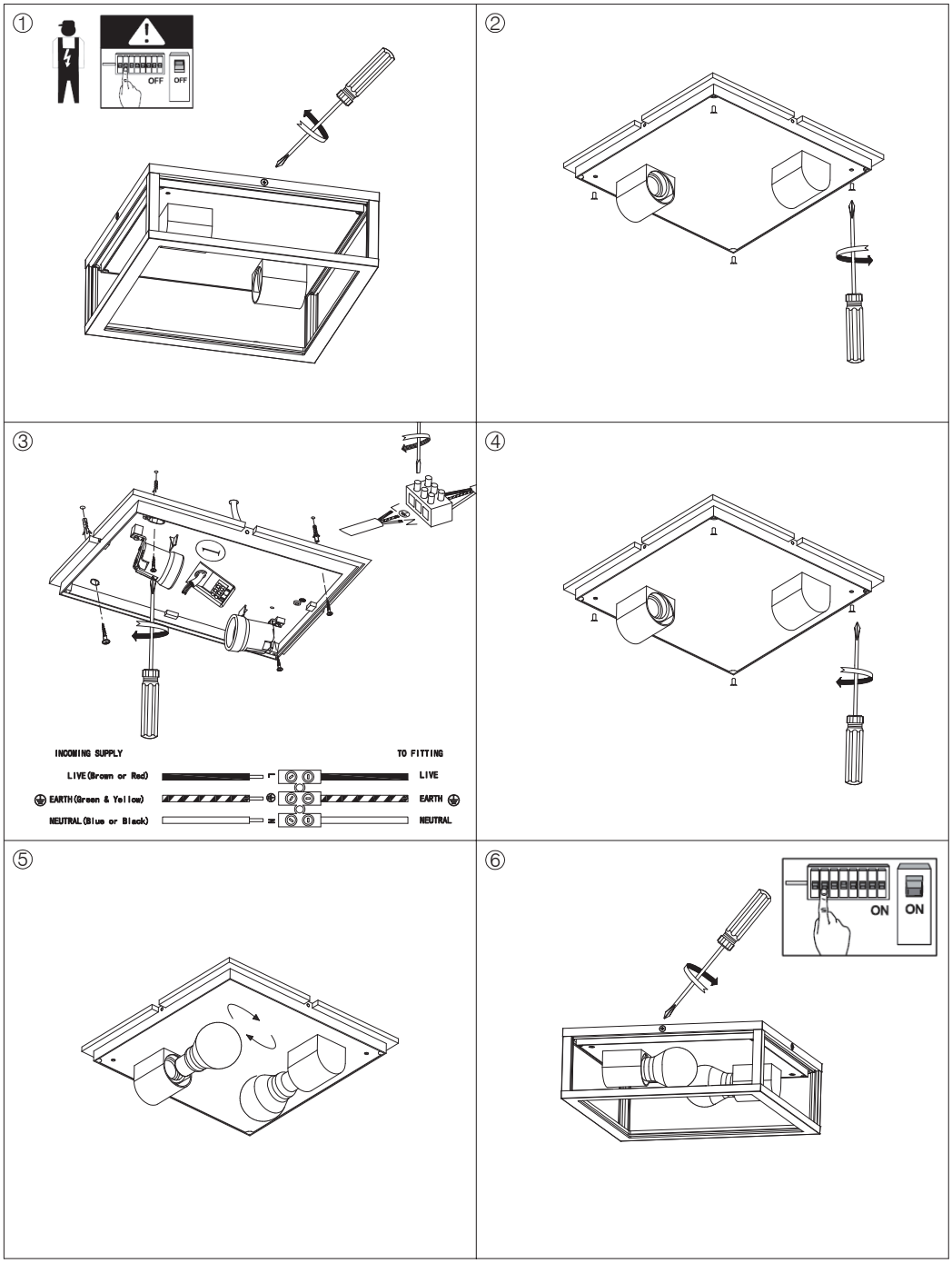

Overall Size:

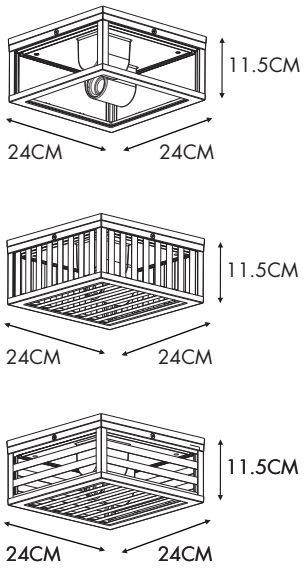

FittinQ B.V.
Smaragdweg 52, 5527 LB Hapert, The Netherlands
www.qazqa.nl

QAZQA