www.weka-holzbau.com

Gartenhaus

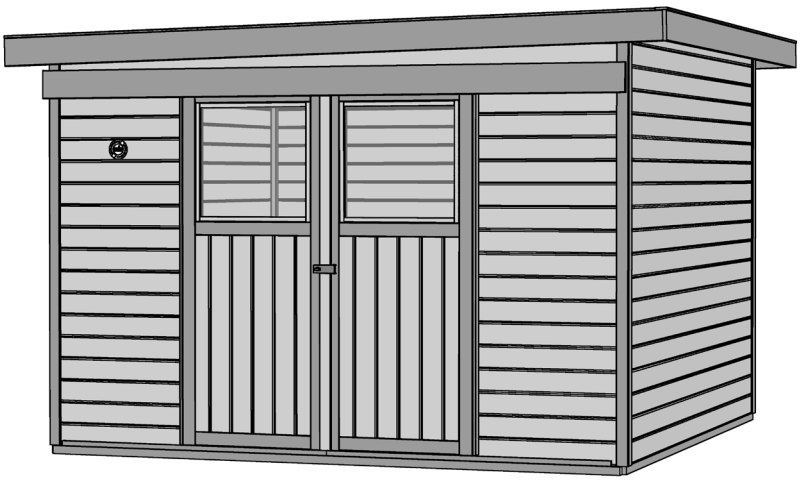

225.2130.10001 / 80001
225.2430.10001 / 80001
225.3030.10001 / 80001

Montage-, Bedienungs- und Wartungsanleitung

800.0286.17.67 + 800.0286.20.02 =

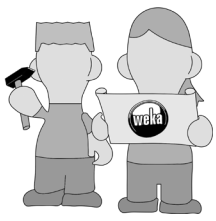

Stand: 2144

Pos	Bild	Abmessung (mm)	Anzahl (Stück)					
			225.2130.10001	225.2130.80001	225.2430.10001	225.2430.80001	225.3030.10001	225.3030.80001
-	-	-	-	-	-	-	-	-
2	R002.0650.2050 R002.0650.2350 R002.0650.2950 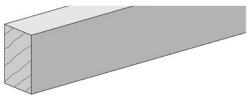	40/60/2050 40/60/2350 40/60/2950	2 - -	2 - -	- 2 -	- 2 -	- - 2	- - 2
2.1	R002.0650.2872 R002.0650.2896 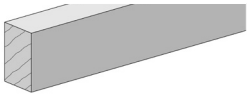	40/60/2872 40/60/2896	2 -	- 2	2 -	- 2	- 2	- 2
3	R002.0660.1928 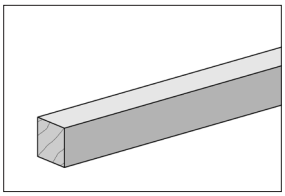 R002.0660.1928 R002.0660.2230 R002.0660.2830	40/40/1928 40/40/2230 40/40/2830	5 - -	5 - -	- 5 -	- 5 -	- - 5	- - 5
4	B100.15.0004 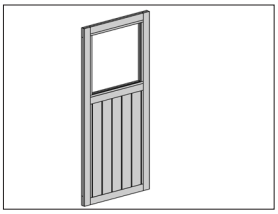	38/750/1800	2	2	2	2	2	2
5	K135.1001.1000 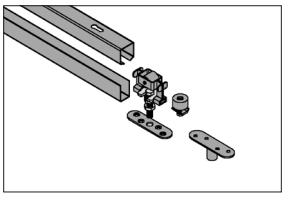	0/0/1420	1	1	1	1	1	1
6	R002.0660.2950 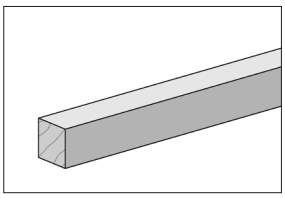	40/40/2950	1	1	1	1	1	1
7	G651.01.0028 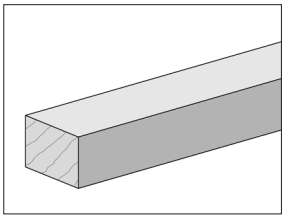	40/60/2860	1	1	1	1	1	1

© Copyright HRB 3662

Pos	Bild	Abmessung (mm)	Anzahl (Stück)					
			225.2130.10001	225.2130.80001	225.2430.10001	225.2430.80001	225.3030.10001	225.3030.80001
8	R002.0091.3344 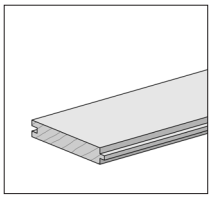	15,5/96/3344	26	26	29	29	36	36
9	R002.0091.2950 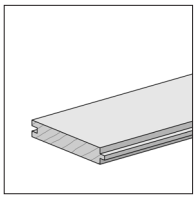	15,5/96/2950	23	23	26	26	33	33
10	R002.0400.2300 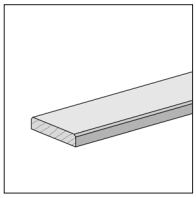	11/58/2300	13	7	14	8	14	8
11	G100.01.0063 G100.01.0064 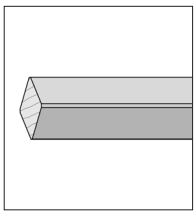	21/28/1510 38/28/1510	1 -	- 1	1 -	- 1	1 -	- 1
12	R002.0530.2300 R002.0530.1825 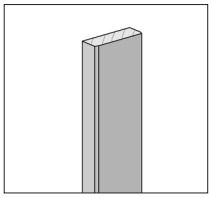	15/45/2300 15/45/1825	7 4	7 2	7 5	7 3	8 5	8 3
13	R002.0425.1810 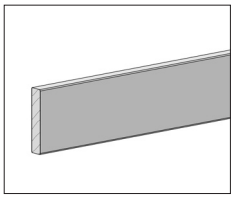	18,5/70/1810 18,5/70/2153	3 -	3 -	3 -	3 8	3 -	3 8
14	R002.0560.3400 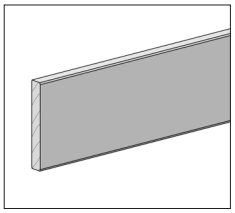	18,5/146/3400 18,5/146/2840	3 -	3 -	3 1	3 1	4 -	4 -

Pos	Bild	Abmessung (mm)	Anzahl (Stück)					
			225.2130.10001	225.2130.80001	225.2430.10001	225.2430.80001	225.3030.10001	225.3030.80001
15	R002.0196.2462 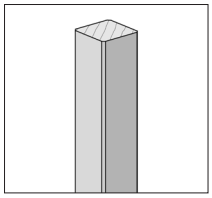	34/34/2462	3	-	3	-	3	-
16	R002.0196.2100 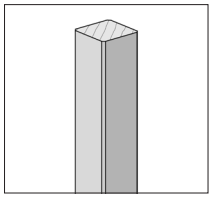	34/34/2100	2	-	2	-	2	-
17	R002.0225.2290 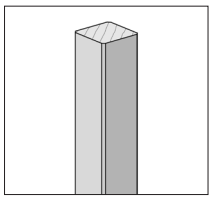	40/40/2290	-	6	-	6	-	6
18	G330.06.0007 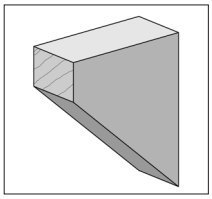	45/100/120	10	10	10	10	10	10
19	R002.0350.1974 R002.0350.2008 R002.0350.2308 R002.0350.2908 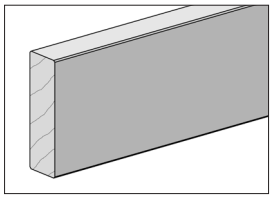	45/146/1974 45/146/2008 45/146/2274 45/146/2308 45/146/2874 45/146/2908	- 3 - - - -	3 - - - - -	- - - 3 - -	- - 3 - - -	- - - - - 3	- - - - 3 -
20	R002.0015.0720 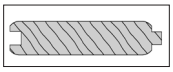 R002.0040.0720 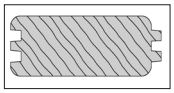	21/121/720 38/121/720	32 -	- 32	32 -	- 32	32 -	- 32
21	G227.01.0406 G132.01.0019 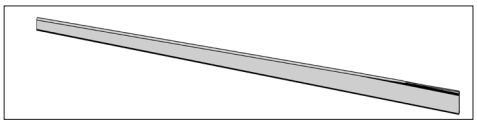	21/121/2950 38/121/2950	2 -	- 2	2 -	- 2	2 -	- 2

© Copyright HRB 3662

Pos	Bild	Abmessung (mm)	Anzahl (Stück)					
			225.2130.10001	225.2130.80001	225.2430.10001	225.2430.80001	225.3030.10001	225.3030.80001
22	G227.01.0001 G227.01.0002 G227.01.0003 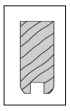 G132.01.0020 G132.01.0021 G132.01.0022 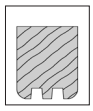	21/58/2050 21/58/2350 21/58/2950 38/58/2050 38/58/2350 38/58/2950	1 - - - - -	- - - 1 - -	- 1 - - - -	- - - - 1 -	- - 1 - - -	- - - - - 1
23	R002.0015.2050 R002.0015.2350 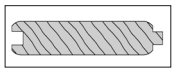 R002.0040.2050 R002.0040.2350 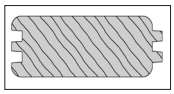	21/121/2050 21/121/2350 38/121/2050 38/121/2350	37 - - -	- - 37 -	- 37 - -	- - - 37	- - - -	- - - -
24	R002.0015.2950 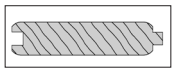 R002.0040.2950 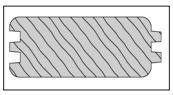	21/121/2950 38/121/2950	20 -	- 20	20 -	- 20	57 -	- 57
25	G105.01.0006 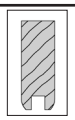 G525.01.0014 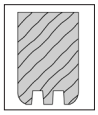	28/60/300 38/60/300	4 -	- 4	4 -	- 4	4 -	- 4

© Copyright HRB 3662

225.xxxx.10001 - M228.001 225.xxxx.80001 - M225.001		Abmessung (mm)	Anzahl (Stück)					
Pos	Bild		225.2130.10001	225.2130.80001	225.2430.10001	225.2430.80001	225.3030.10001	225.3030.80001
M1	K001.8050.0004 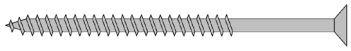	5,0 x 80	10	30	10	30	10	30
M2	K001.6040.0004 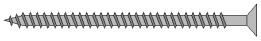	4,0 x 60	55	380	55	230	55	230
M3	K001.4040.0004	4,0 x 40	560	230	560	380	560	380
M4	K001.3535.0004	3,5 x 35	150	150	150	150	150	150
M5	K001.3035.0004	3,5 x 30	100	100	100	100	100	100
M6	K001.2535.0004	3,5 x 25	55	55	55	55	55	55
M7	K010.5022.0001	2,2 x 55	730	730	730	730	730	730
M8	K010.3016.0001	1,6 x 30	10	10	10	10	10	10
-	-	-	-	-	-	-	-	-
M10	K065.9000.0001 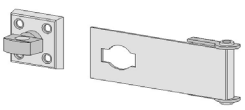	0/40/40	1	1	1	1	1	1
M11	K100.1010.0001	Ø 65	1	1	1	1	1	1
M12	K002.9522.0001	2,2 x 9,5	2	-	2	-	2	-
	K002.1625.0001	2,5 x 16	-	2	-	2	-	2

© Copyright HRB 3662

1.

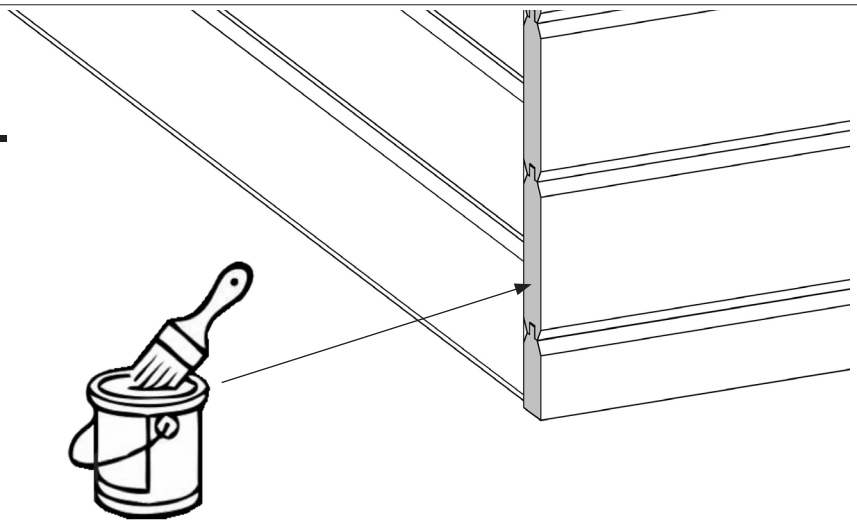

2.

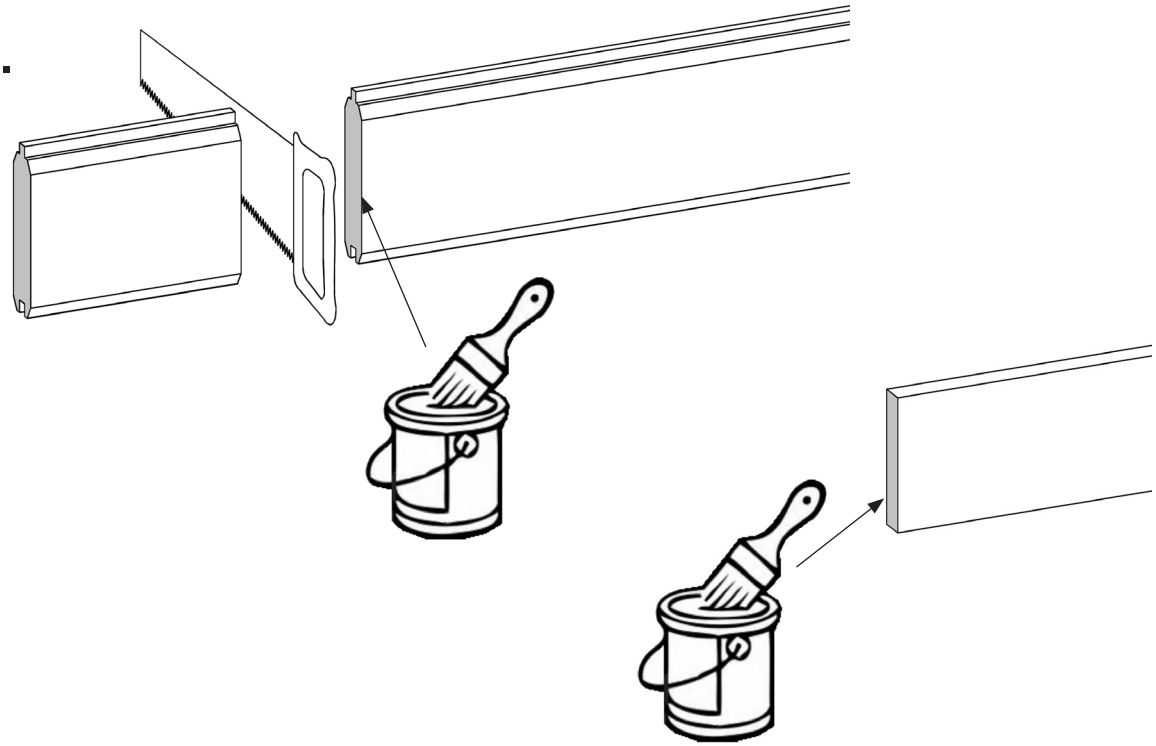

3.

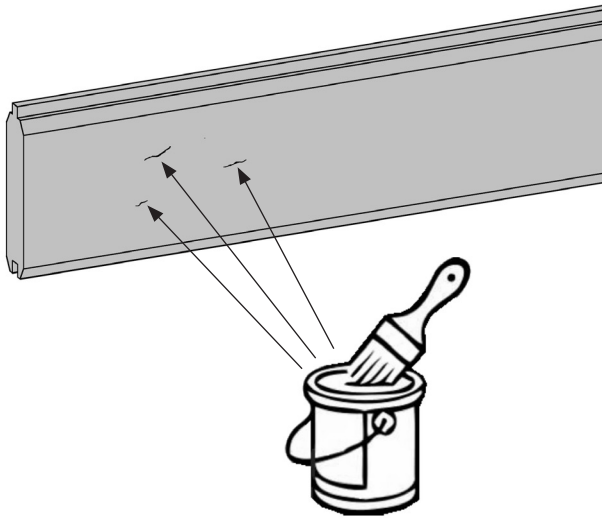

© Copyright HRB 3662

1

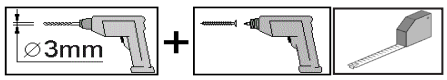

M1	5,0 x 80

Art.-Nr.: 225.2130.10001

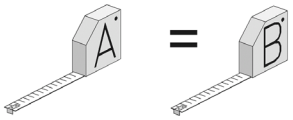

= 90°

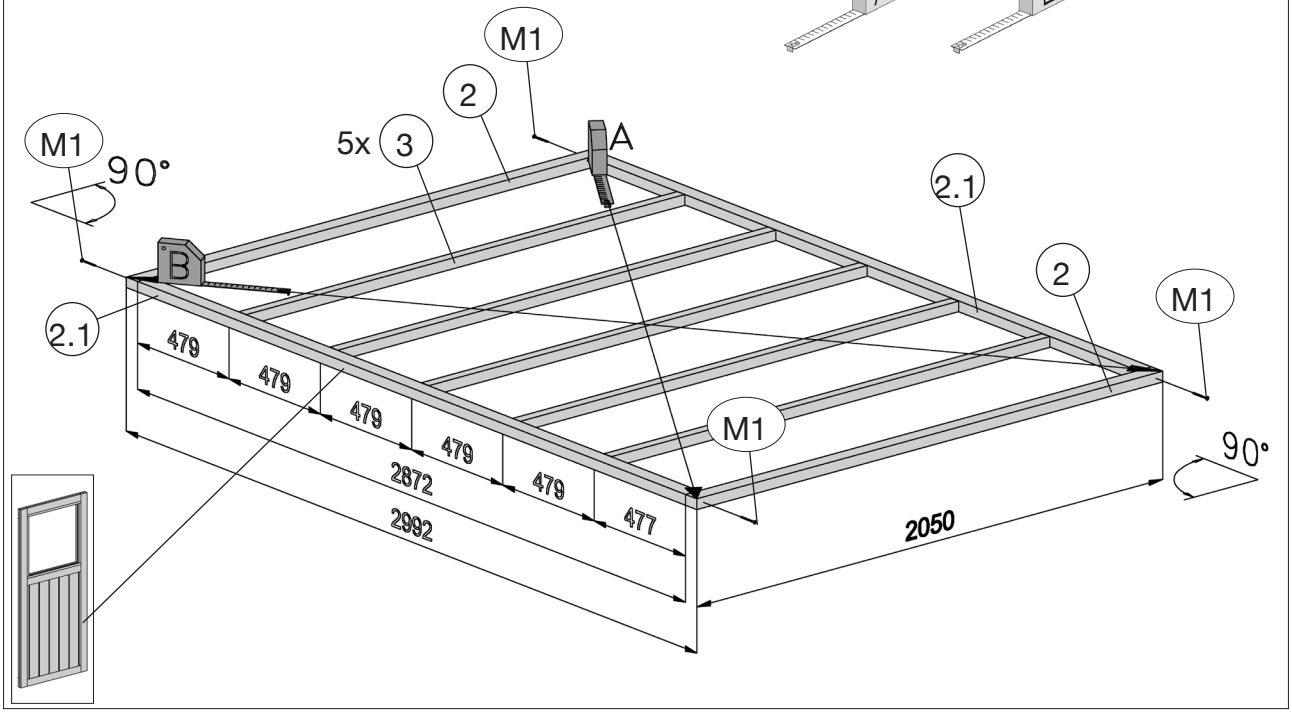

1

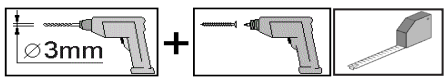

M1	5,0 x 80

Art.-Nr.: 225.2130.80001

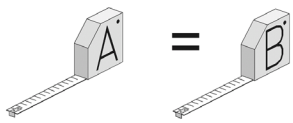

= 90°

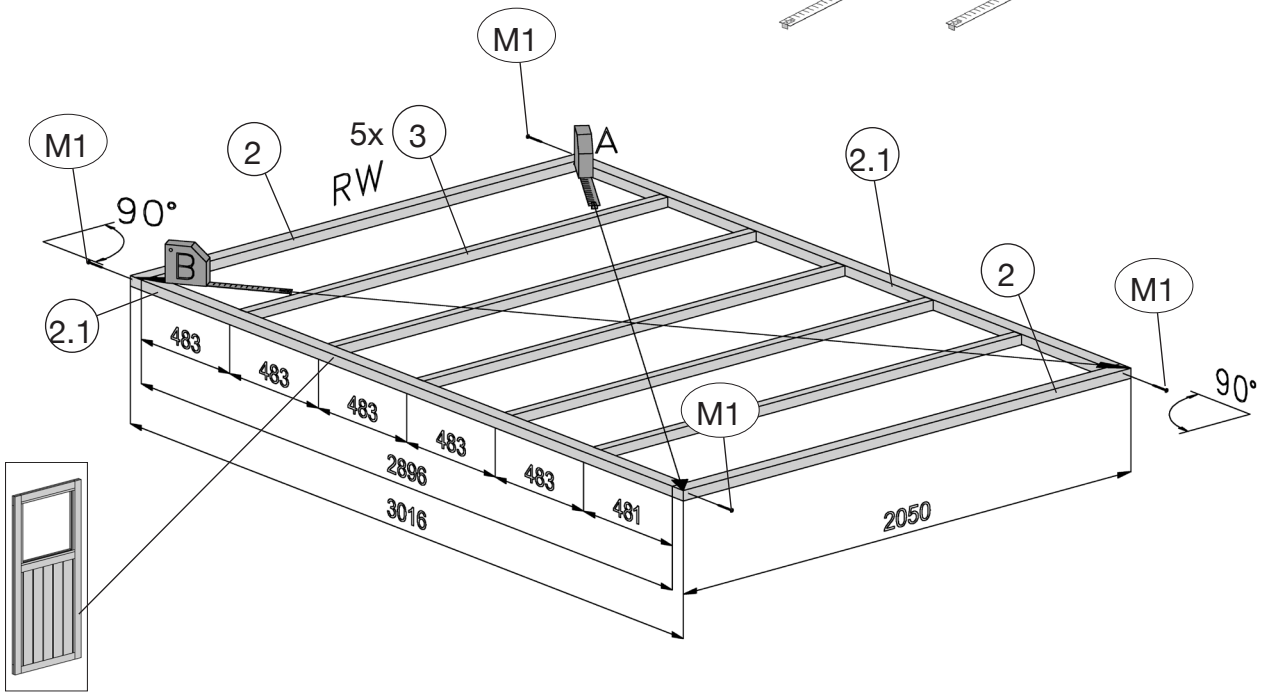

© Copyright HRB 3662

1

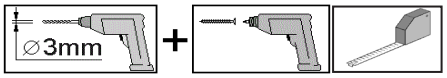

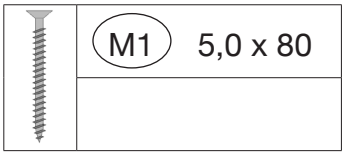

Art.-Nr.: 225.2430.10001

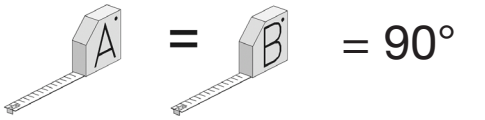

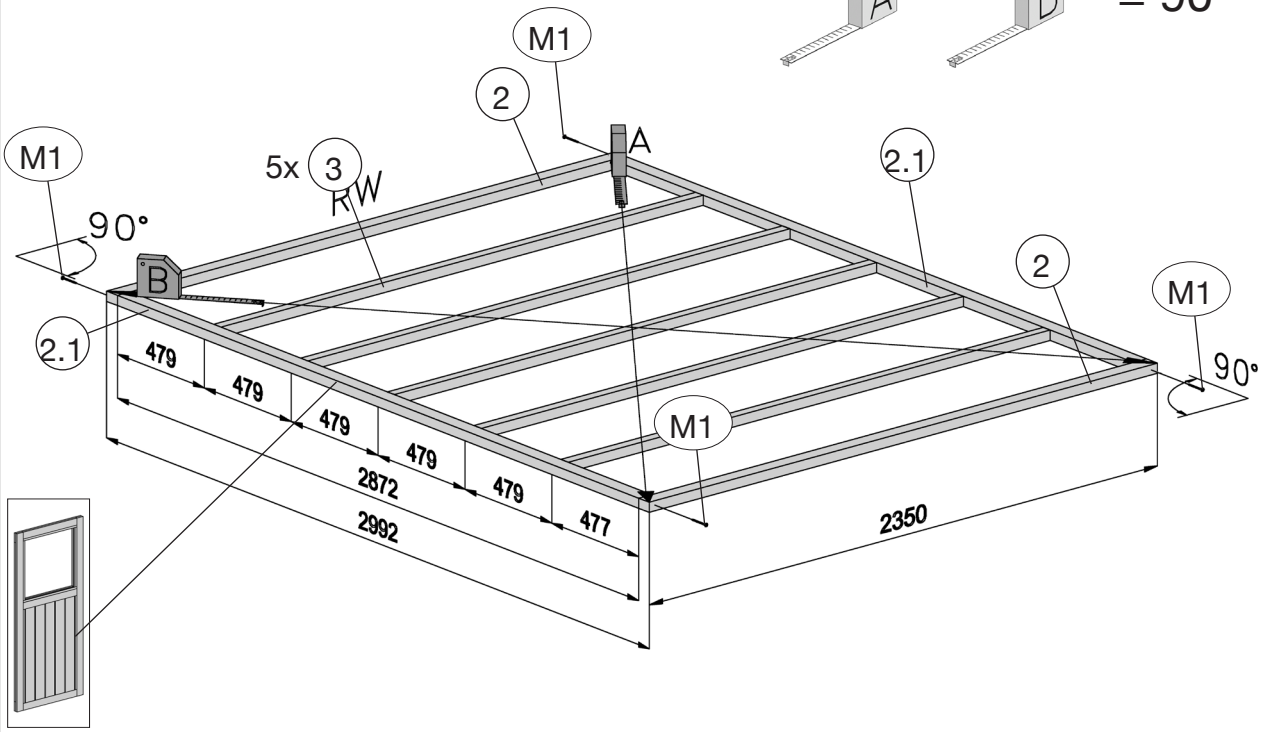

1

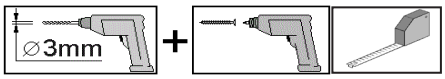

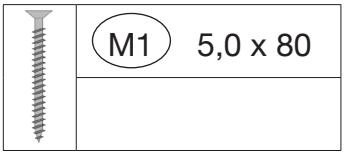

Art.-Nr.: 225.2430.80001

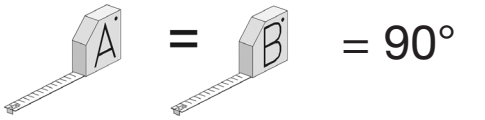

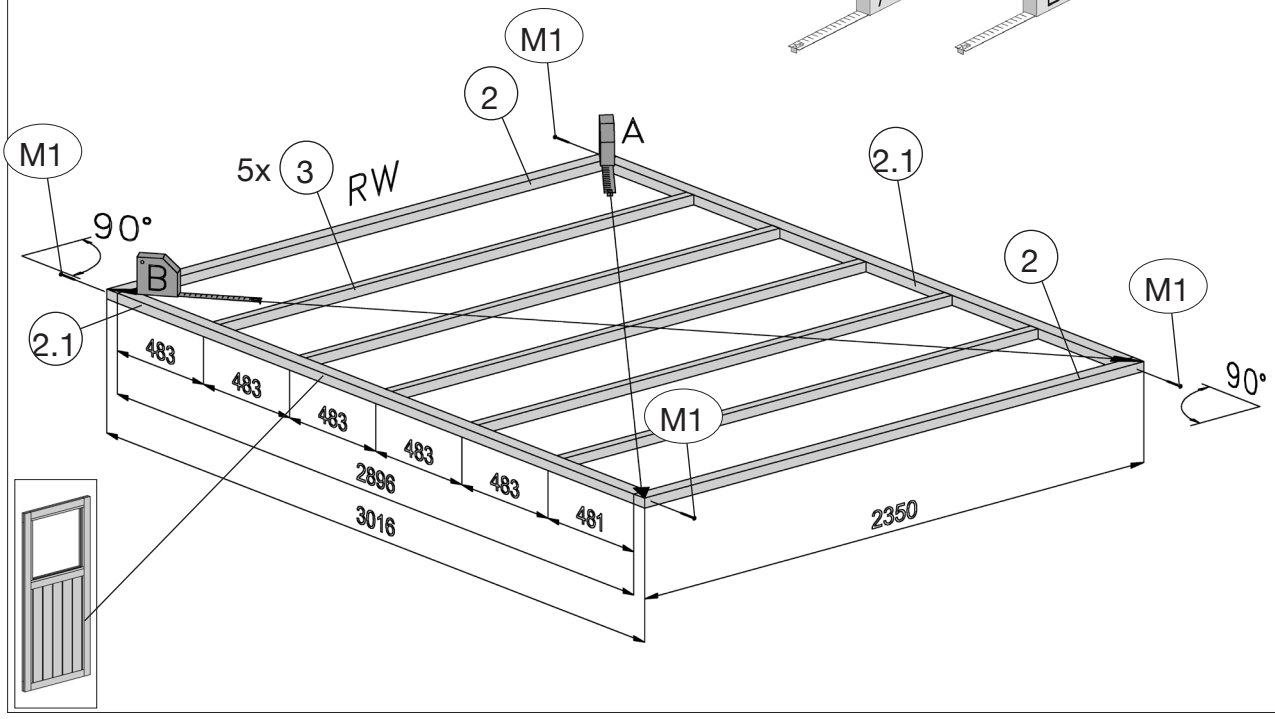

© Copyright HRB 3662

1 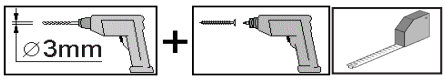

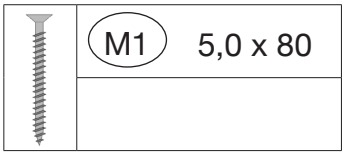

Art.-Nr.: 225.3030.10001

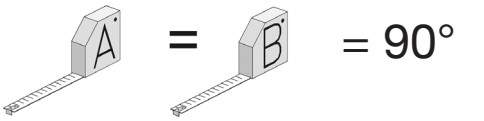

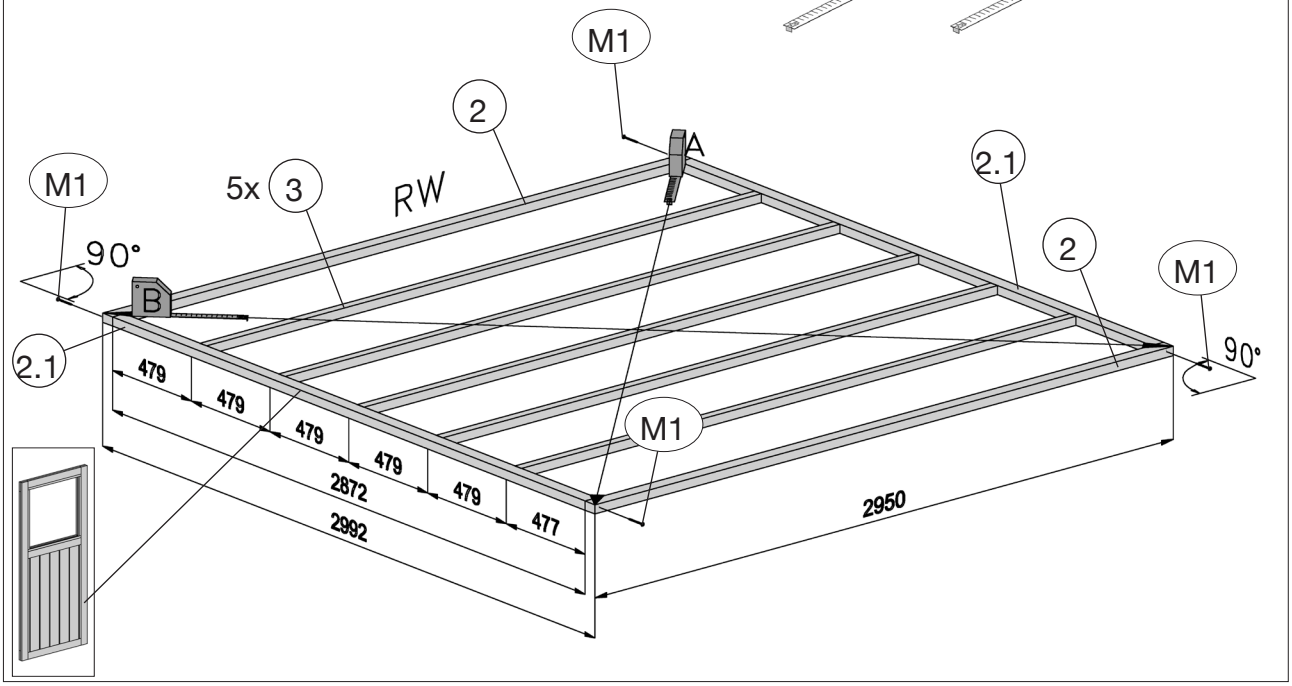

1 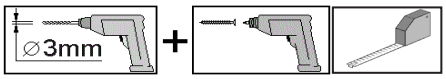

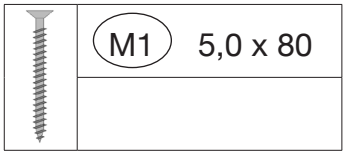

Art.-Nr.: 225.3030.80001

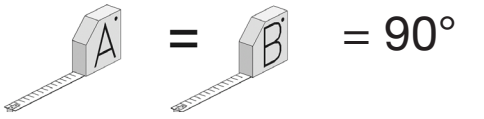

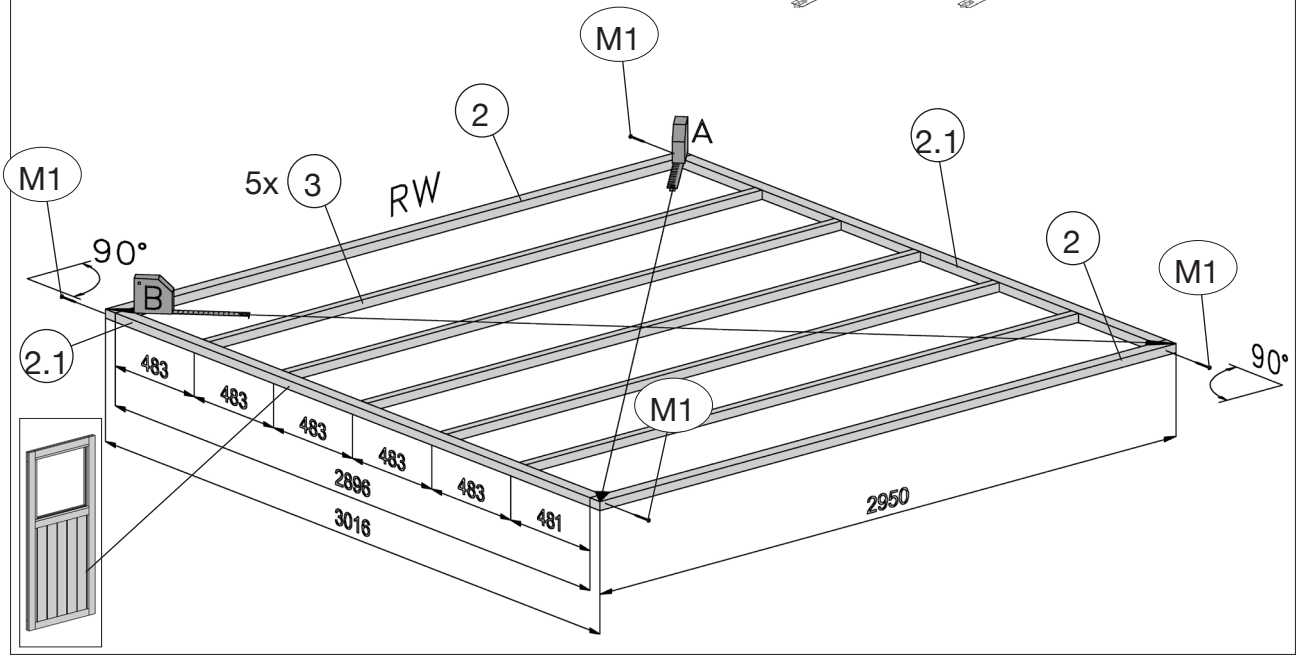

© Copyright HRB 3662

2

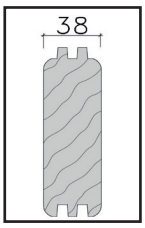

225.XXXX.80001

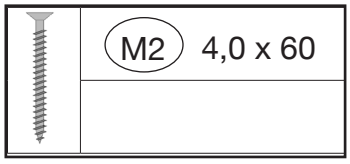

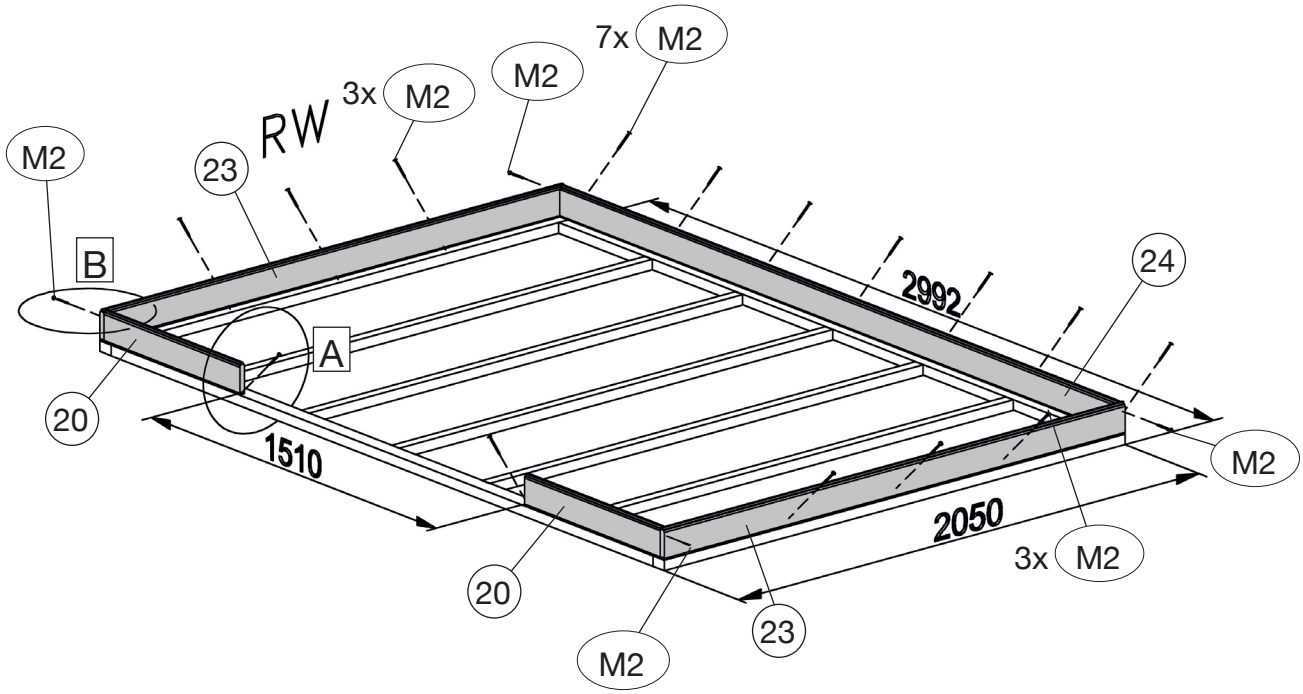

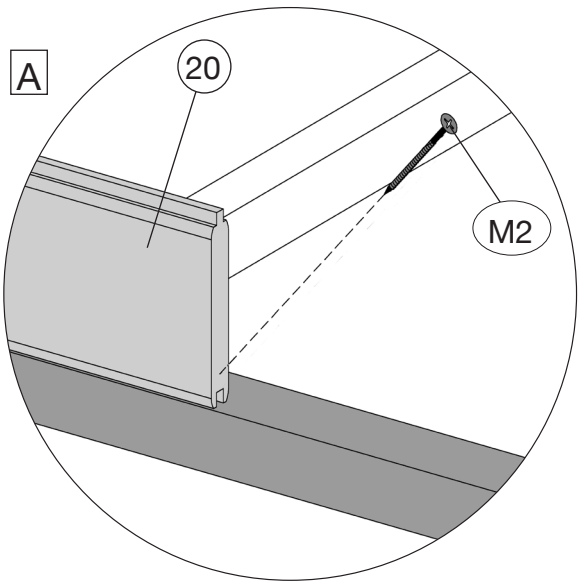

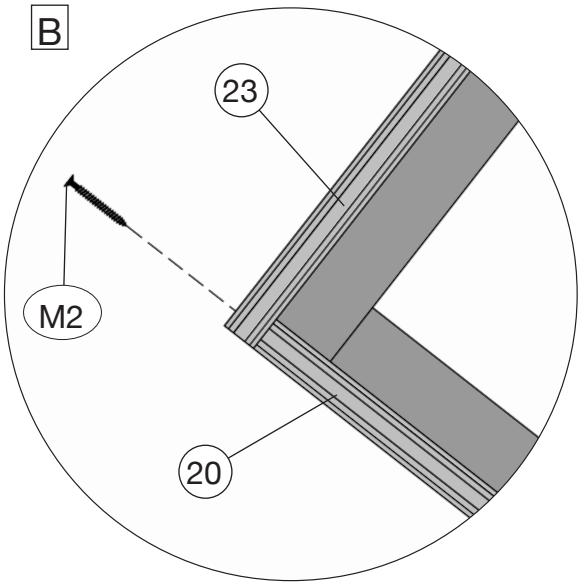

Abb.: 225.2130.10001

© Copyright HRB 3662

2

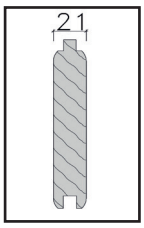

225.XXXX.10001

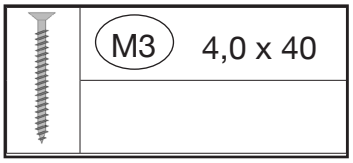

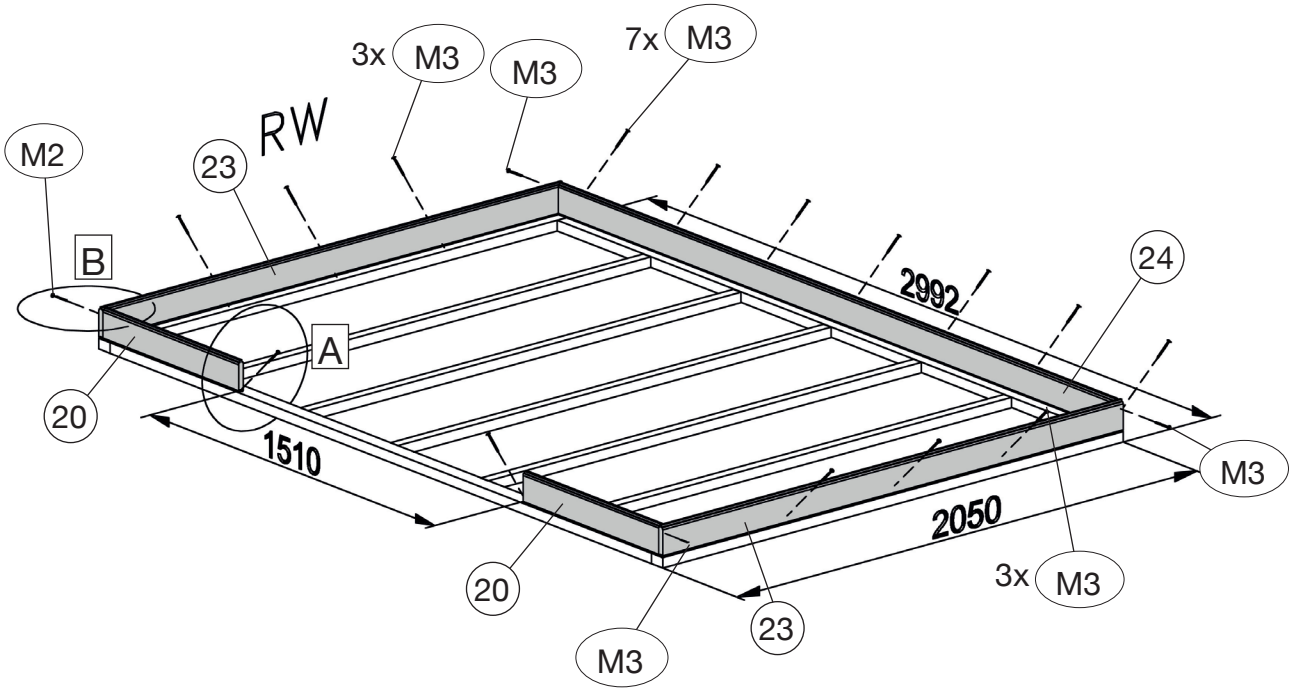

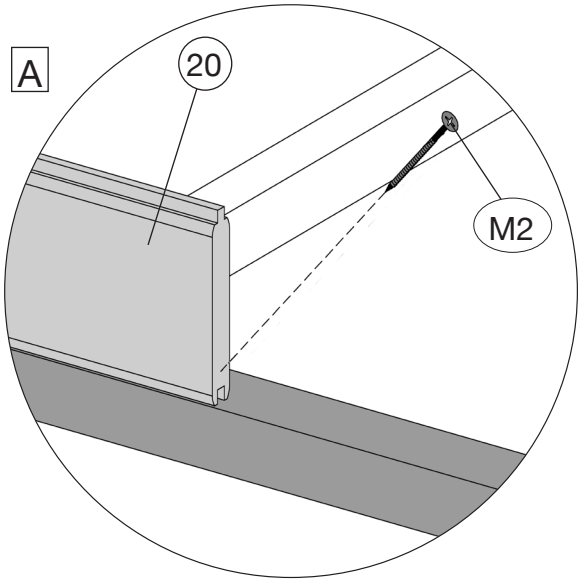

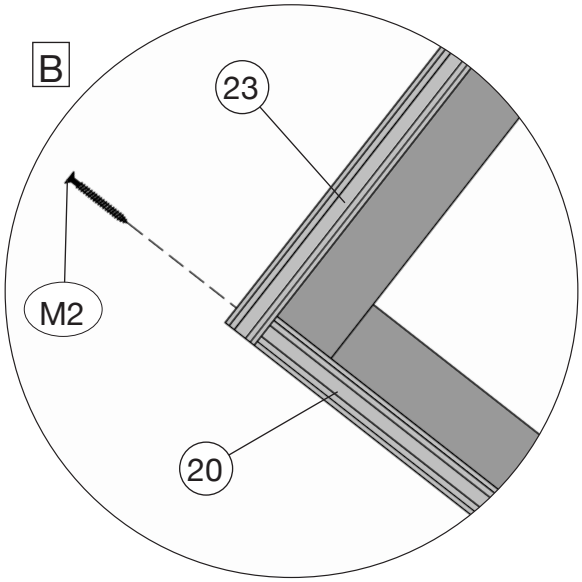

Abb.: 225.2130.10001

© Copyright HRB 3662

3

M7 2,2 x 55

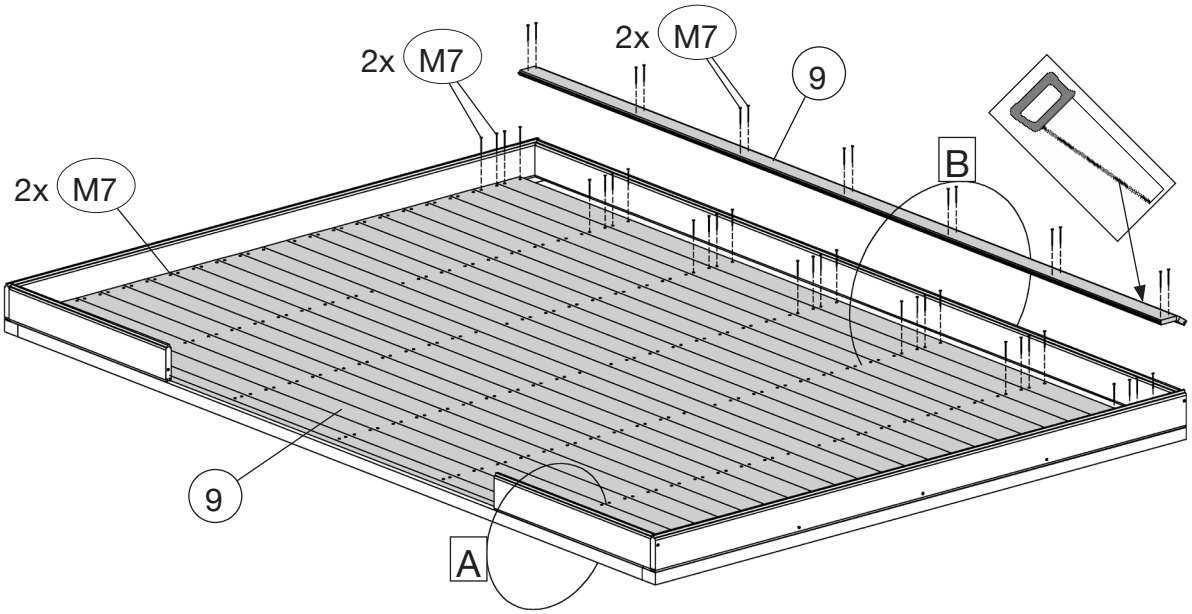

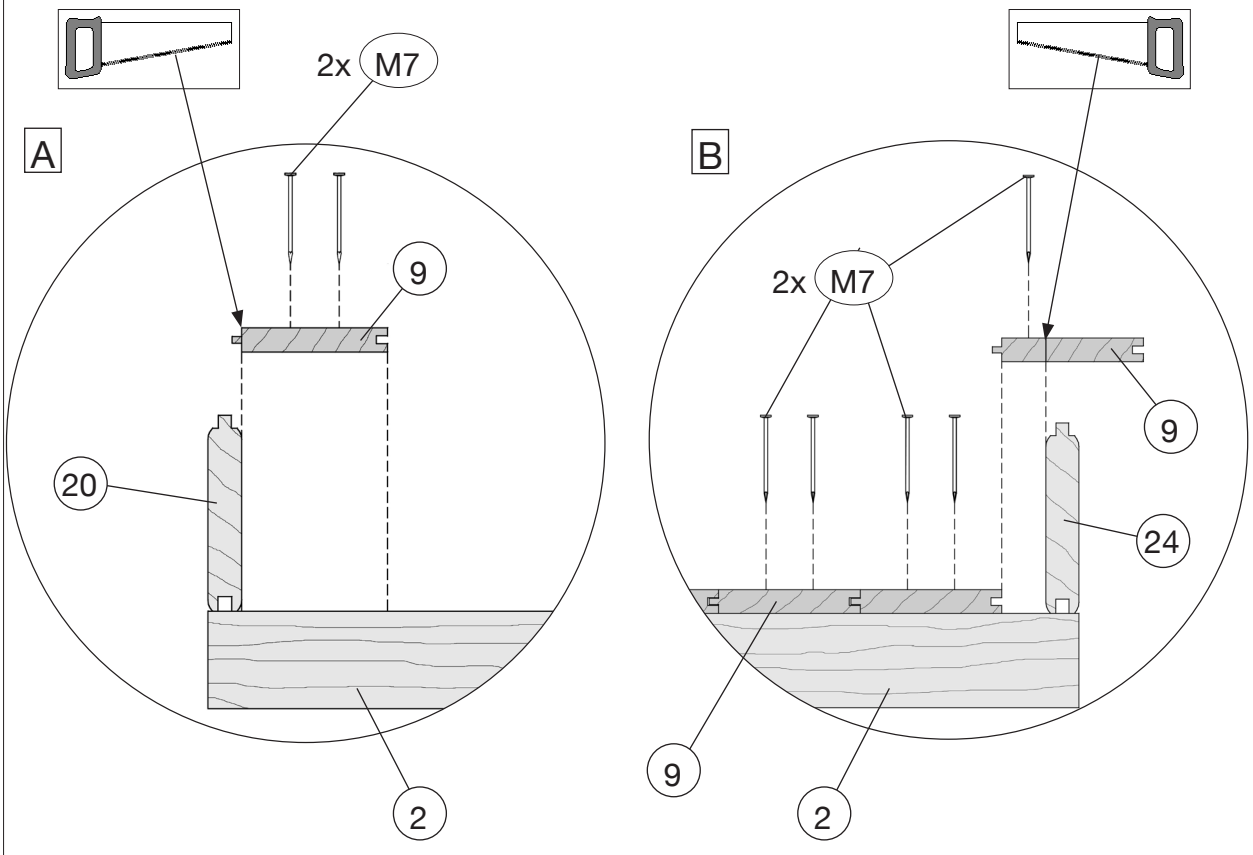

Abb.: 225.2130.10001

© Copyright HRB 3662

4

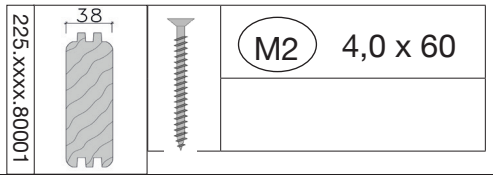

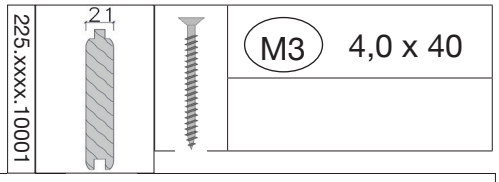

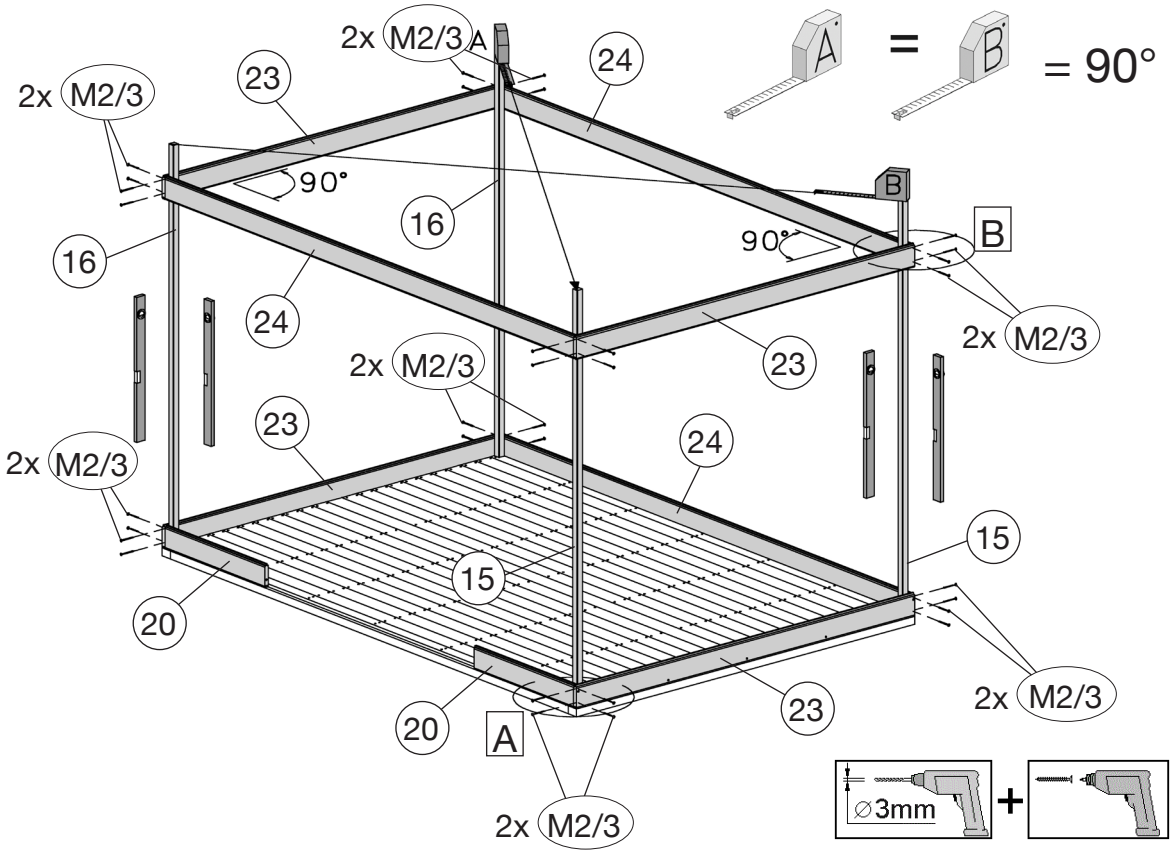

Die oberen Wandbohlen werden nur vorübergehend als Montagehilfe befestigt (Abb.5), später wieder abgenommen und an anderer Stelle montiert. (Abb.9)

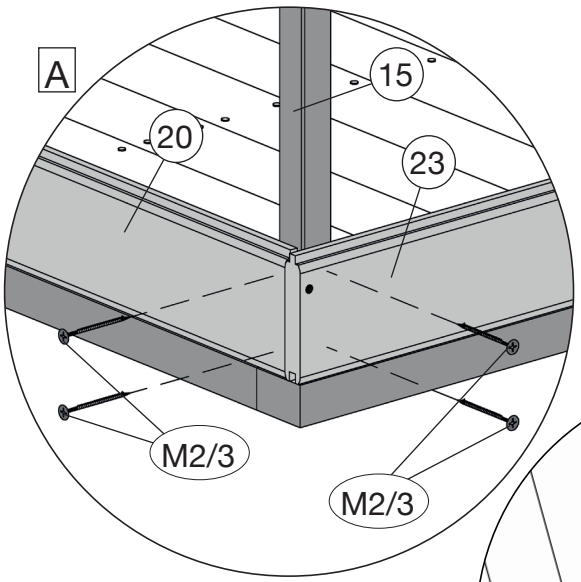

Abb.: 225.2130.10001

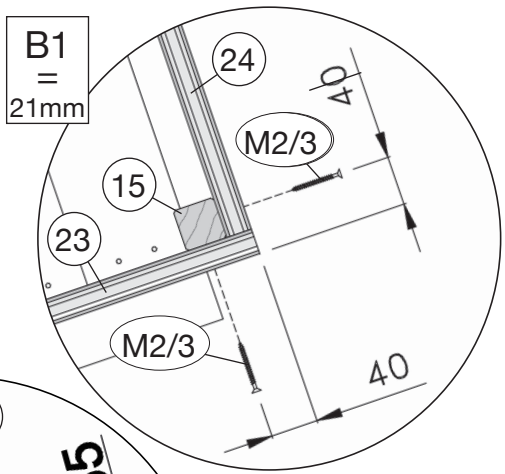

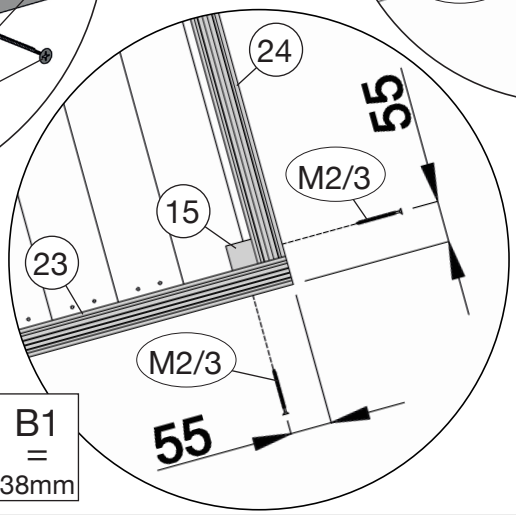

© Copyright HRB 3662

5

M3	4,0 x 40
M2	4,0 x 60

5.1

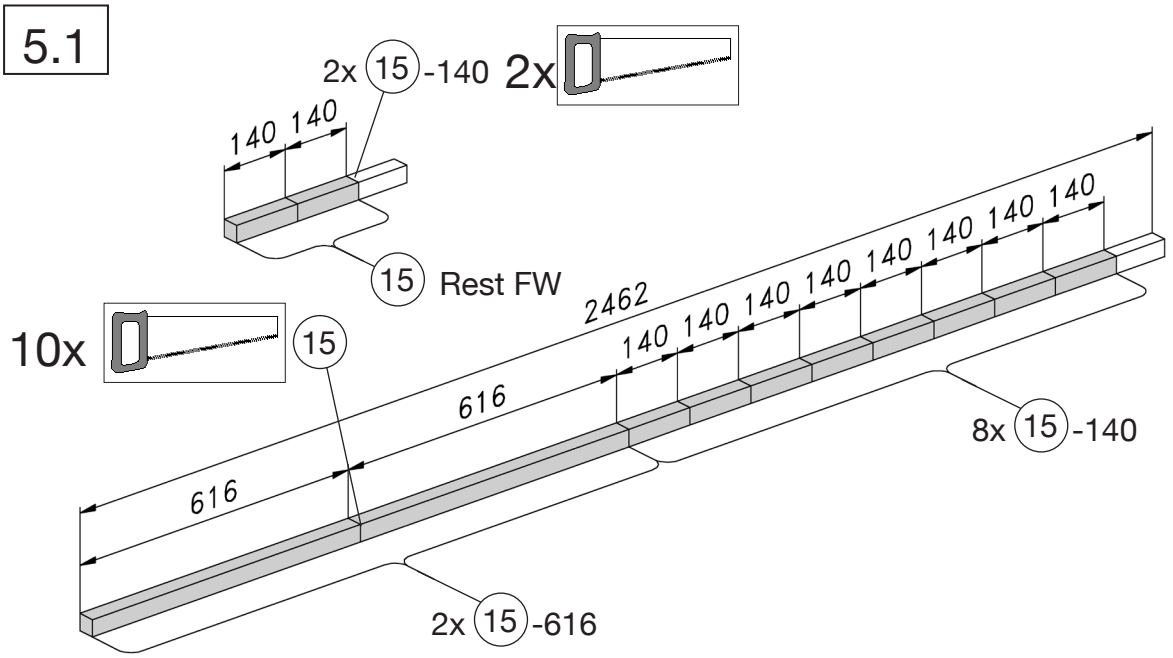

5

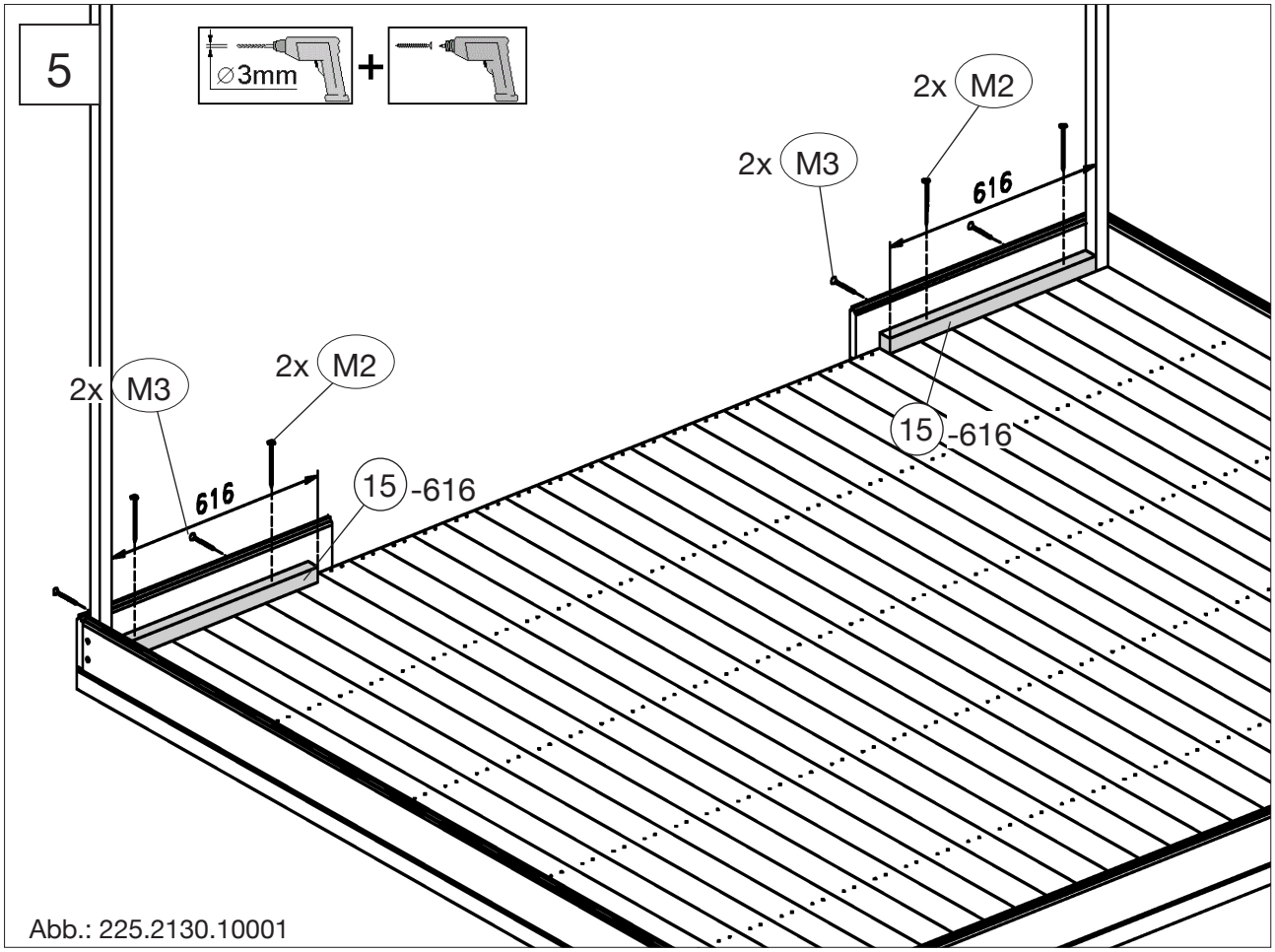

Abb.: 225.2130.10001

© Copyright HRB 3662

5

5.1a Art.-Nr.: 225.--30.80001

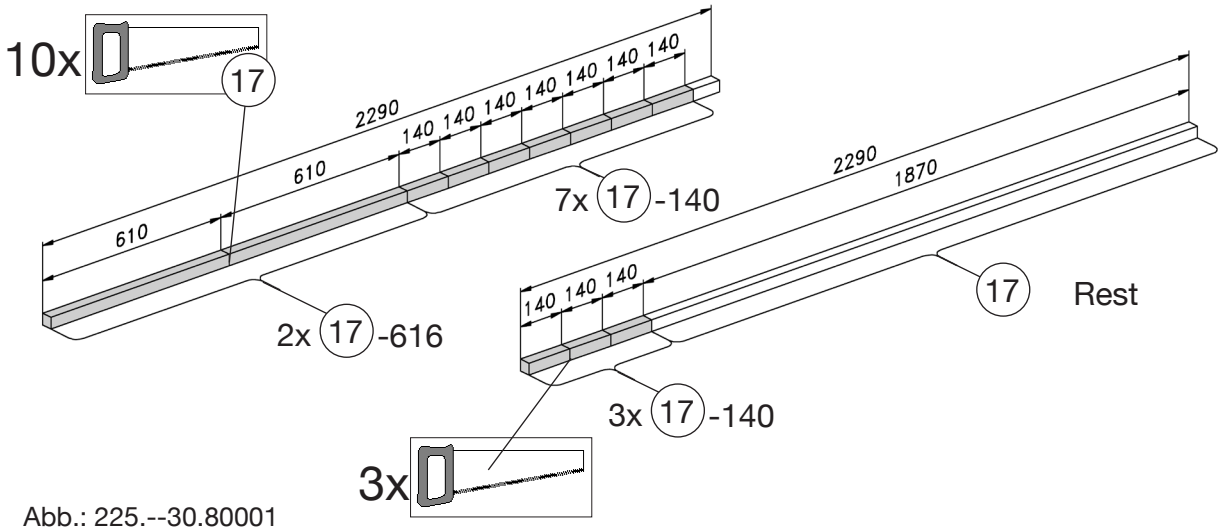

Abb.: 225.--30.80001

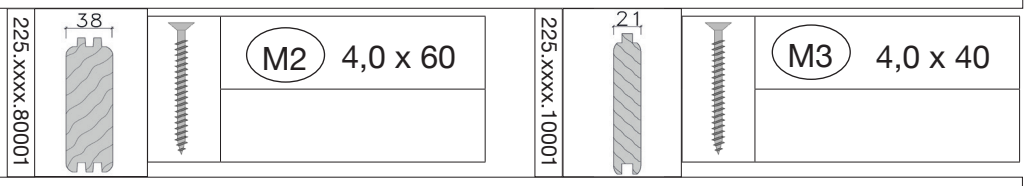

6

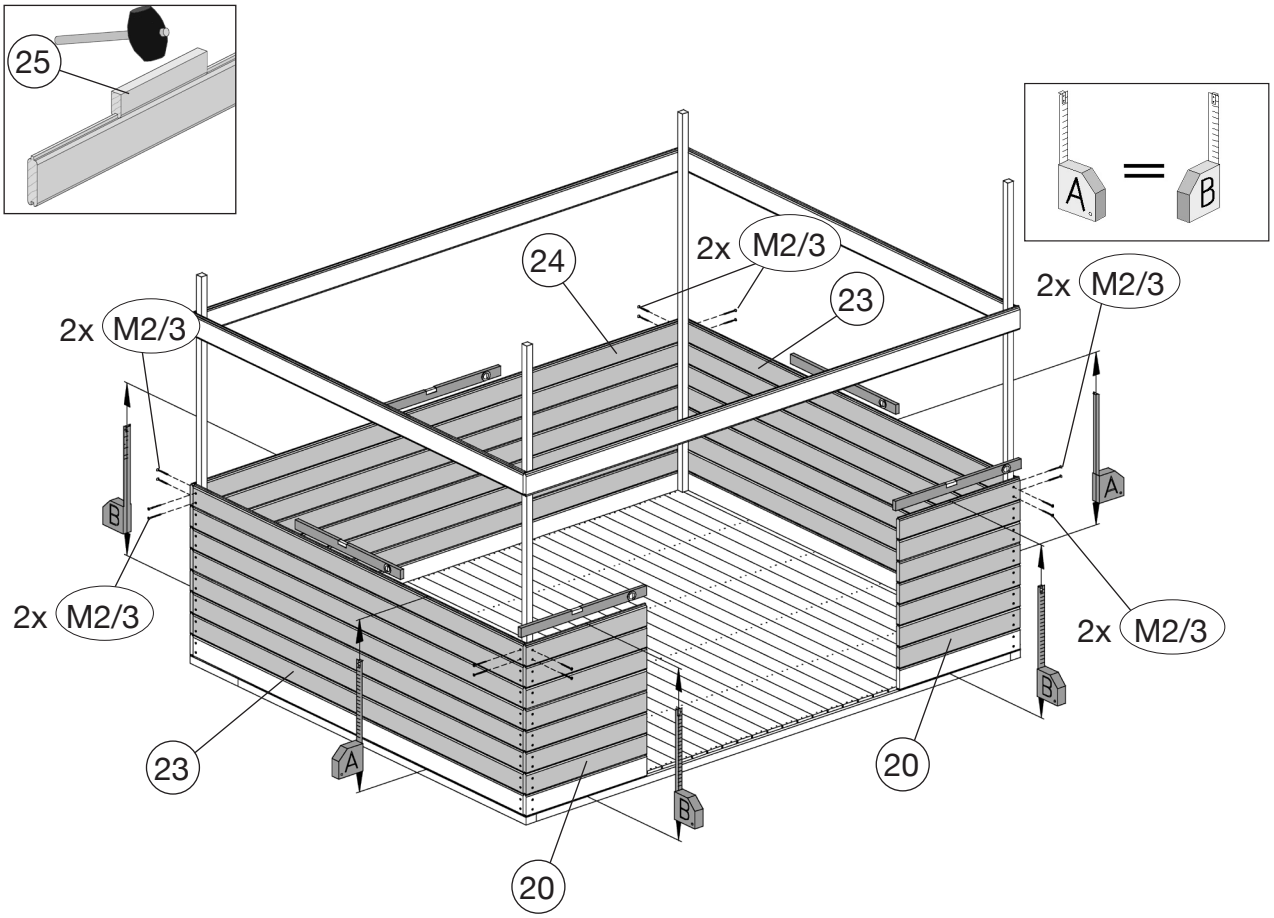

Abb.: 225.2130.10001

 © Copyright HRB 3662

7

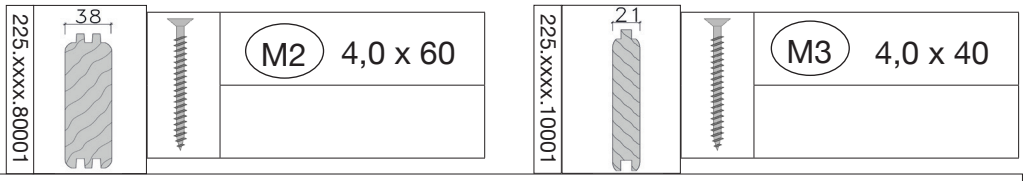

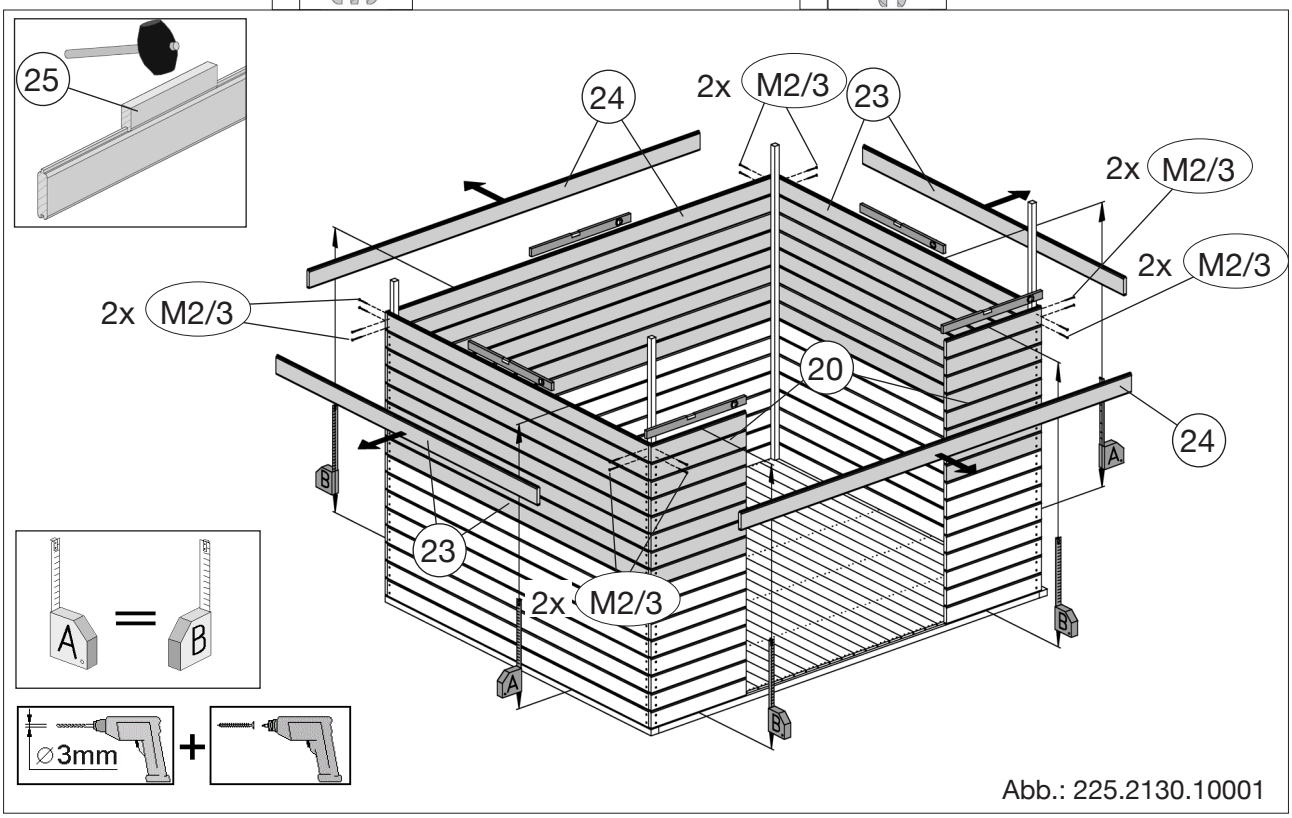

Abb.: 225.2130.10001

8

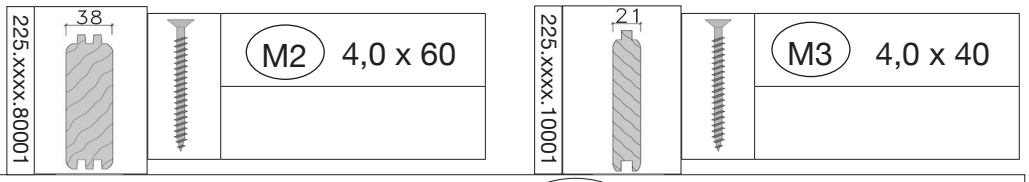

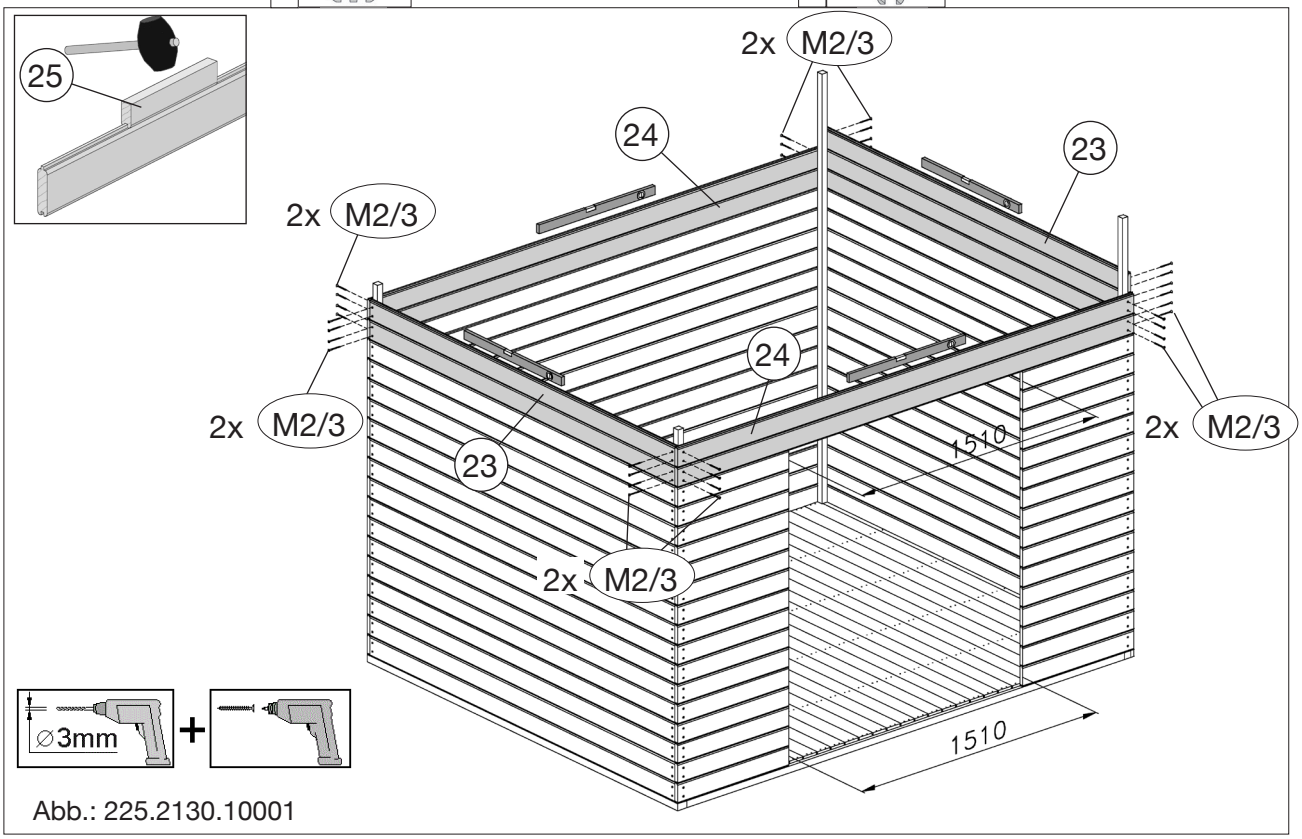

Abb.: 225.2130.10001

© Copyright HRB 3662

9

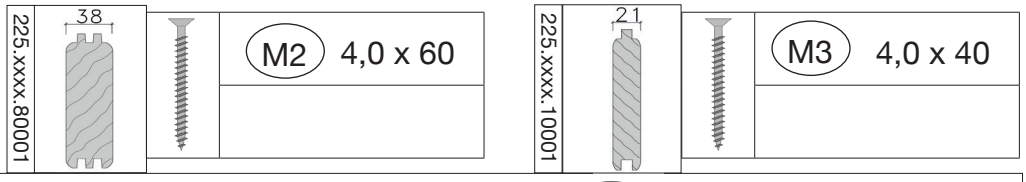

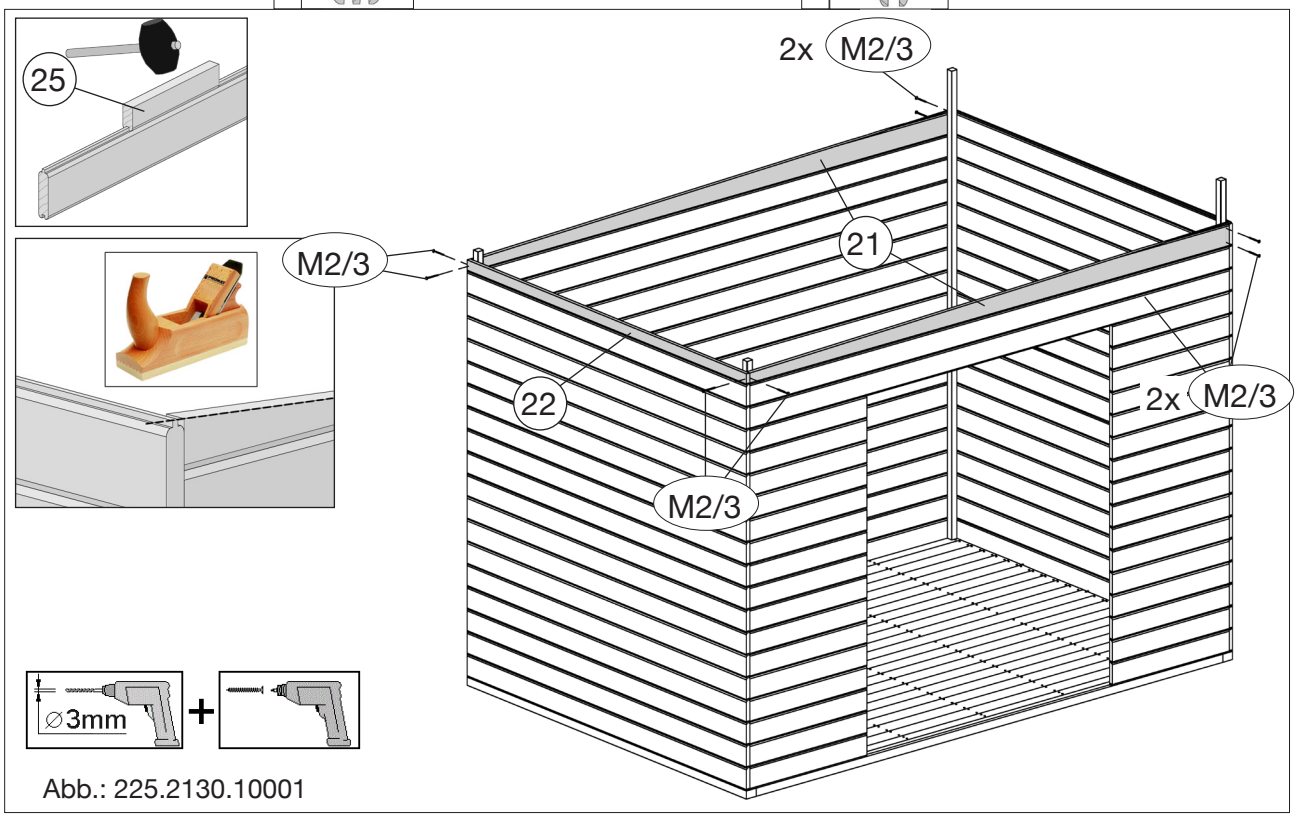

Abb.: 225.2130.10001

10

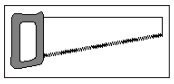

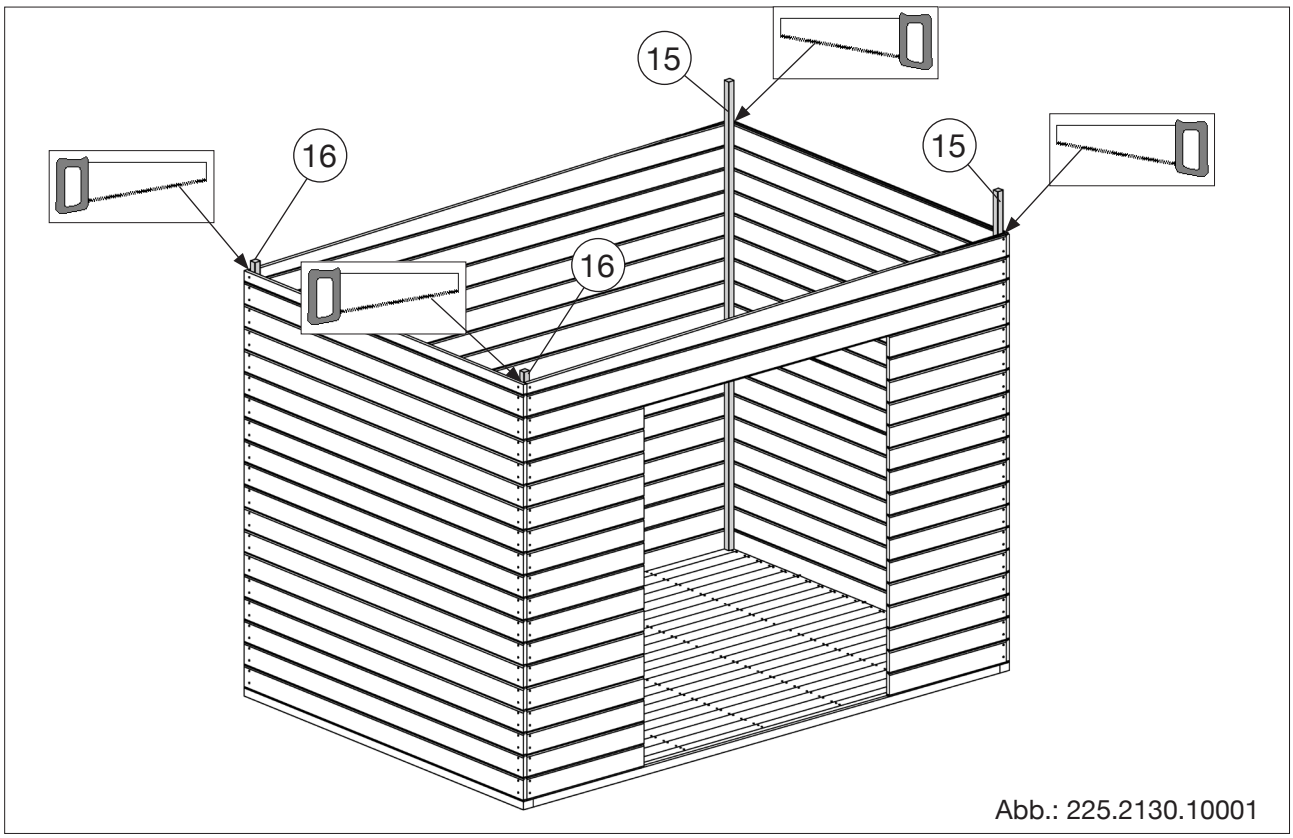

Abb.: 225.2130.10001

© Copyright HRB 3662

11

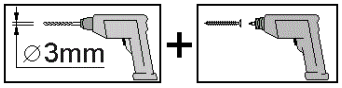

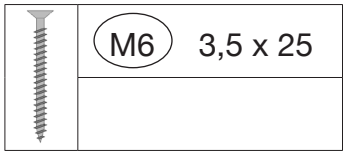

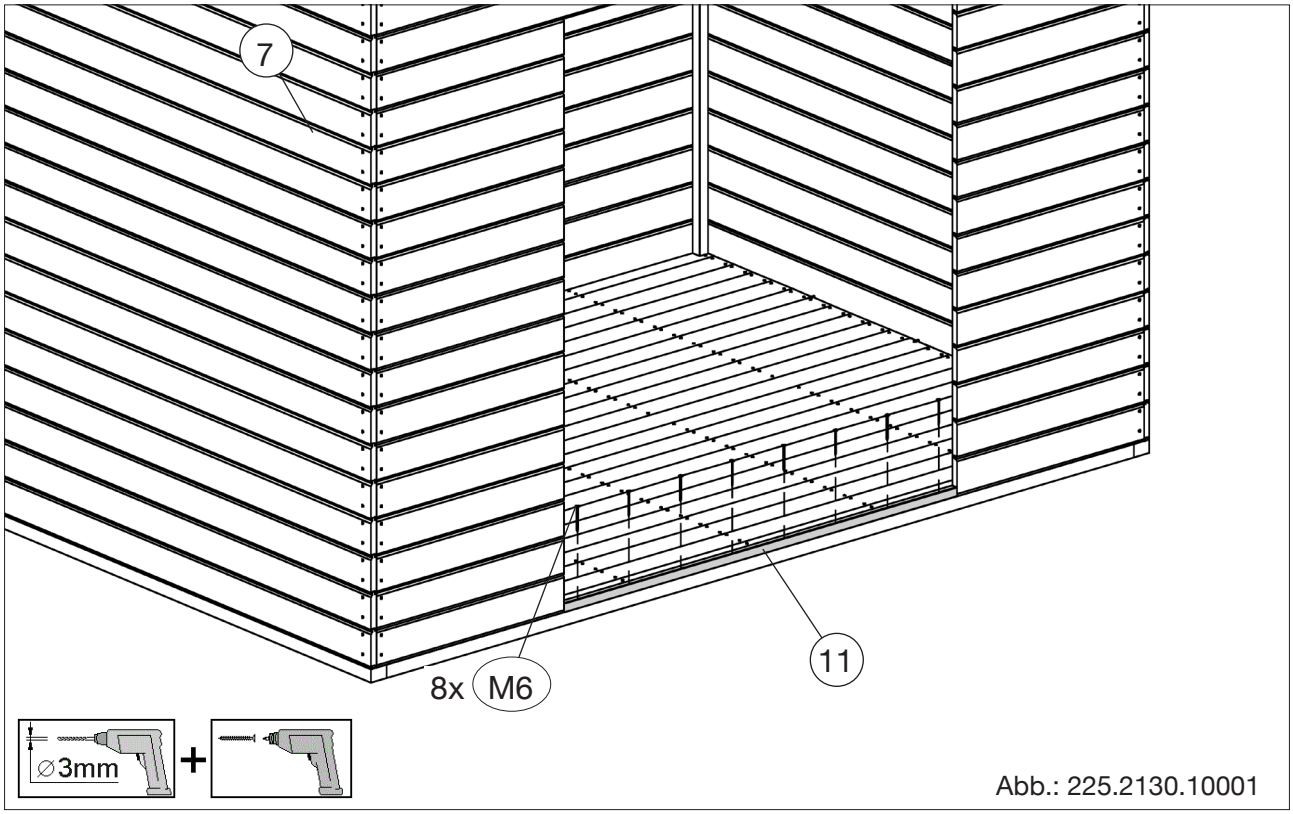

Abb.: 225.2130.10001

12

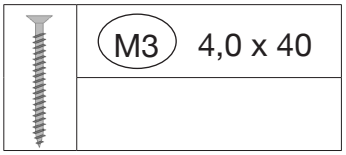

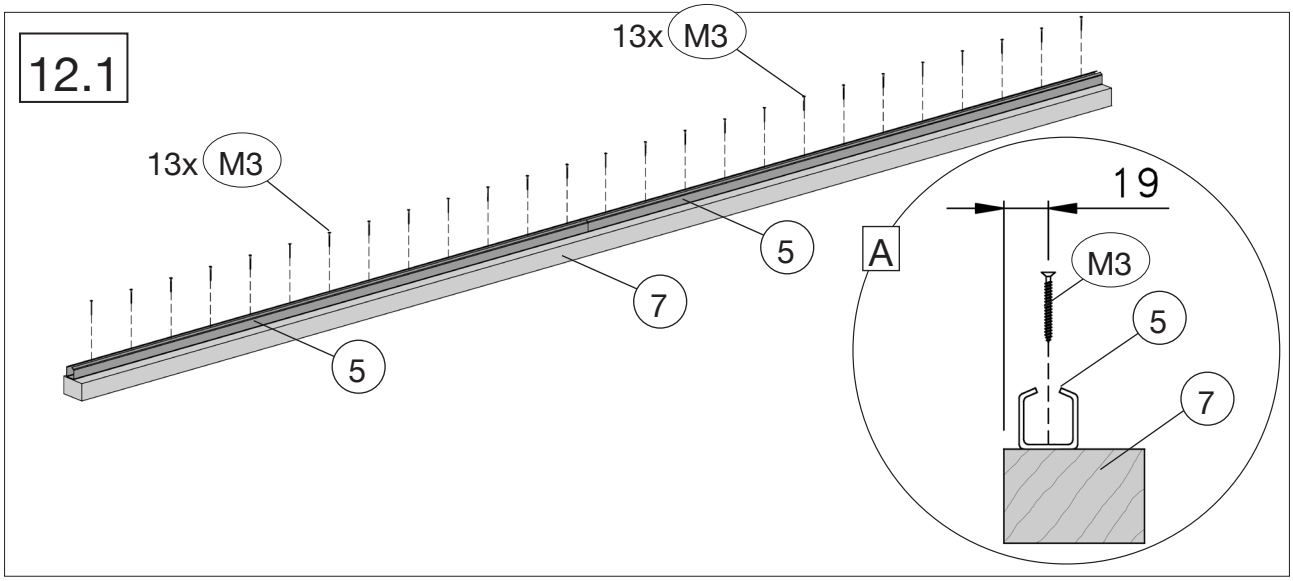

 © Copyright HRB 3662

12

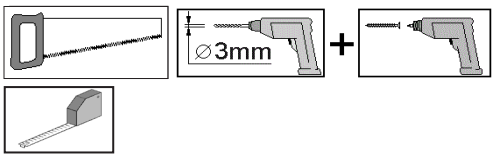

M1	5,0 x 80	M2	4,0 x 60
M3	4,0 x 40		

12.2

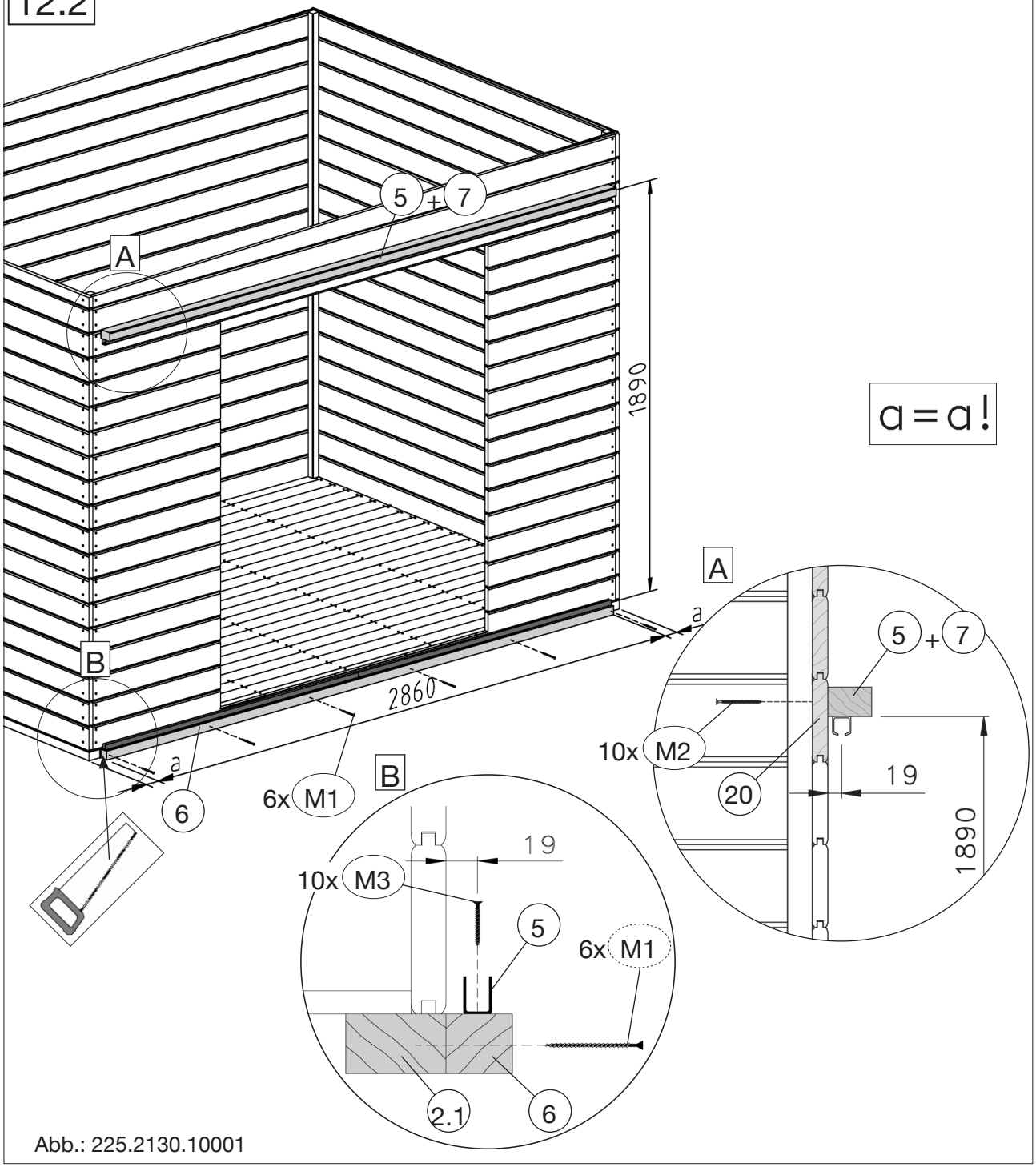

Abb.: 225.2130.10001

© Copyright HRB 3662

13

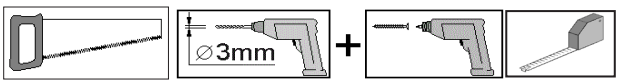

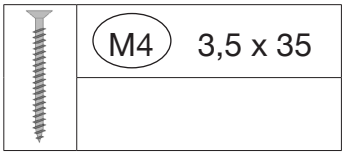

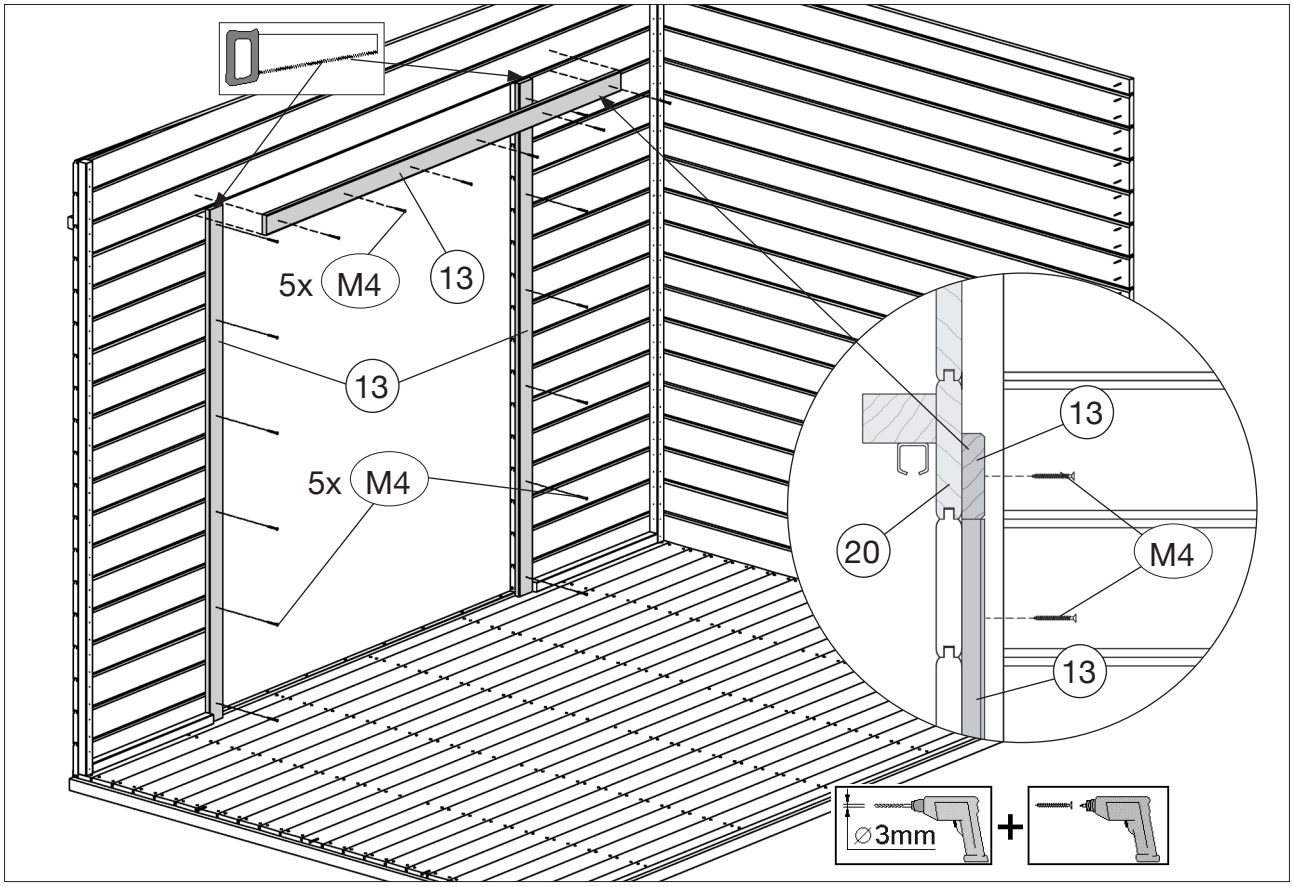

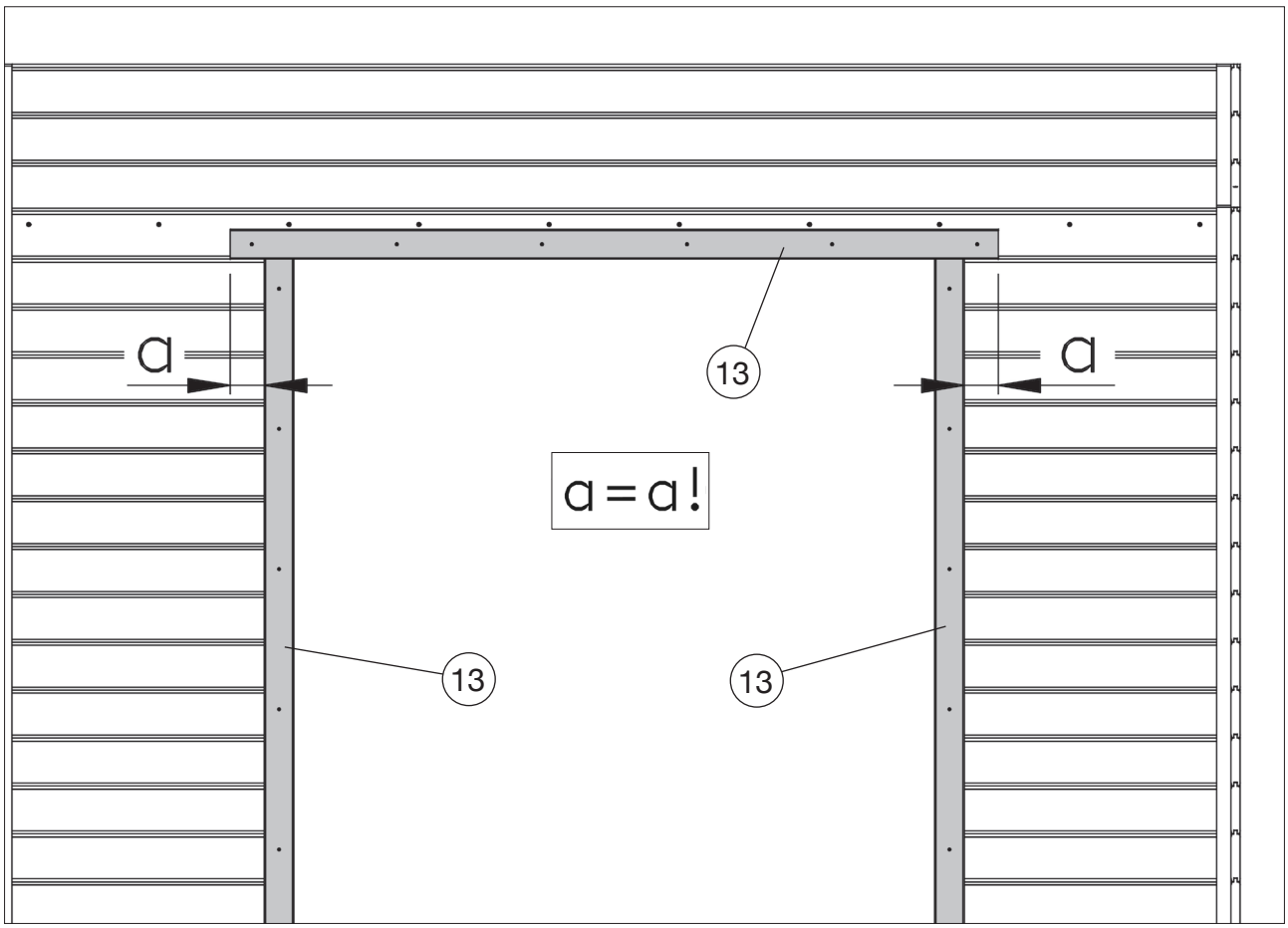

© Copyright HRB 3662

14

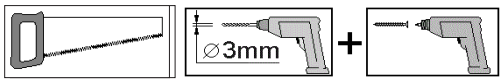

M4	3,5 x 35
M5	3,5 x 30

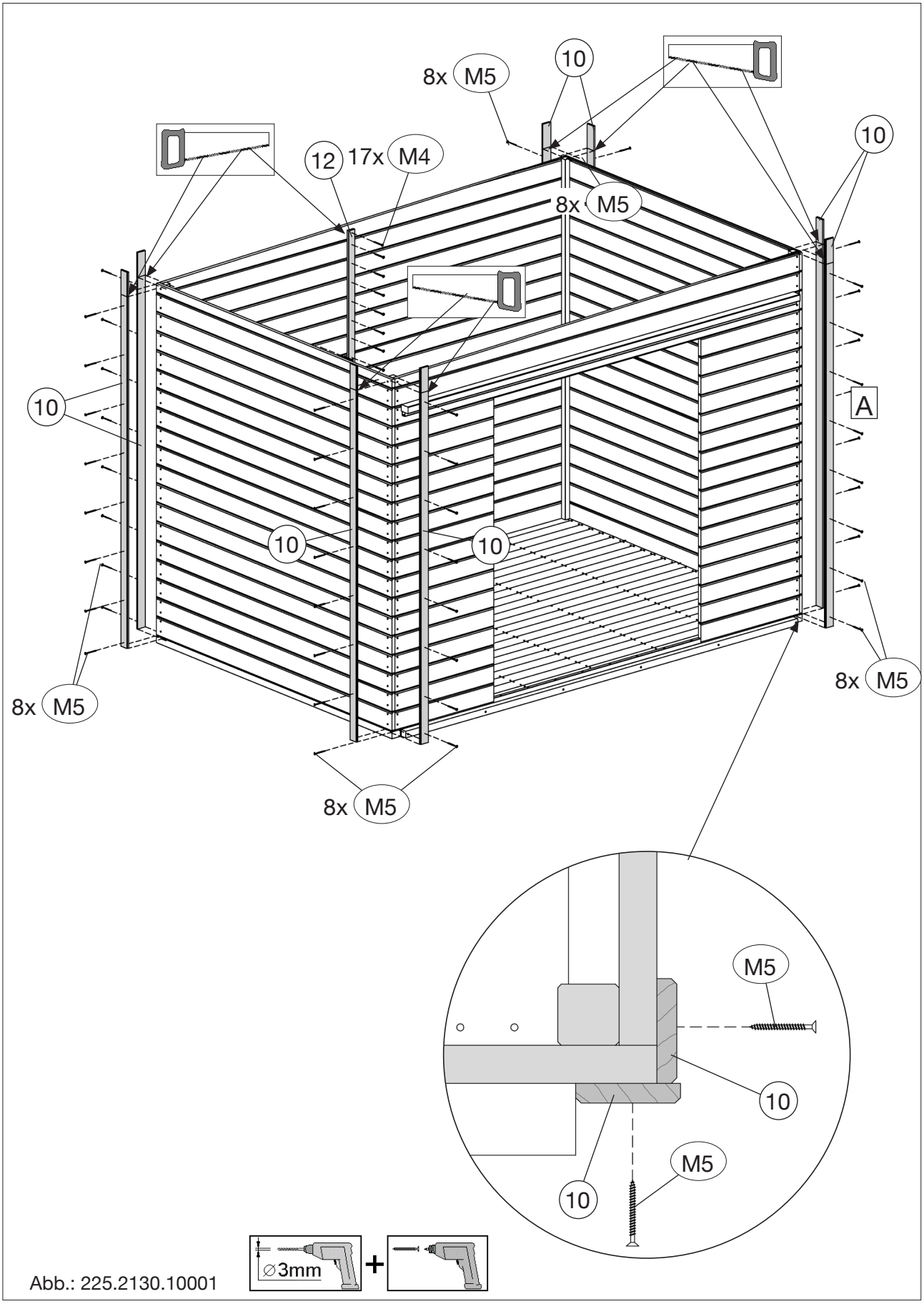

Abb.: 225.2130.10001

© Copyright HRB 3662

15

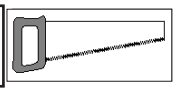

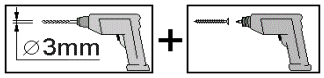

M6	3,5 x 25

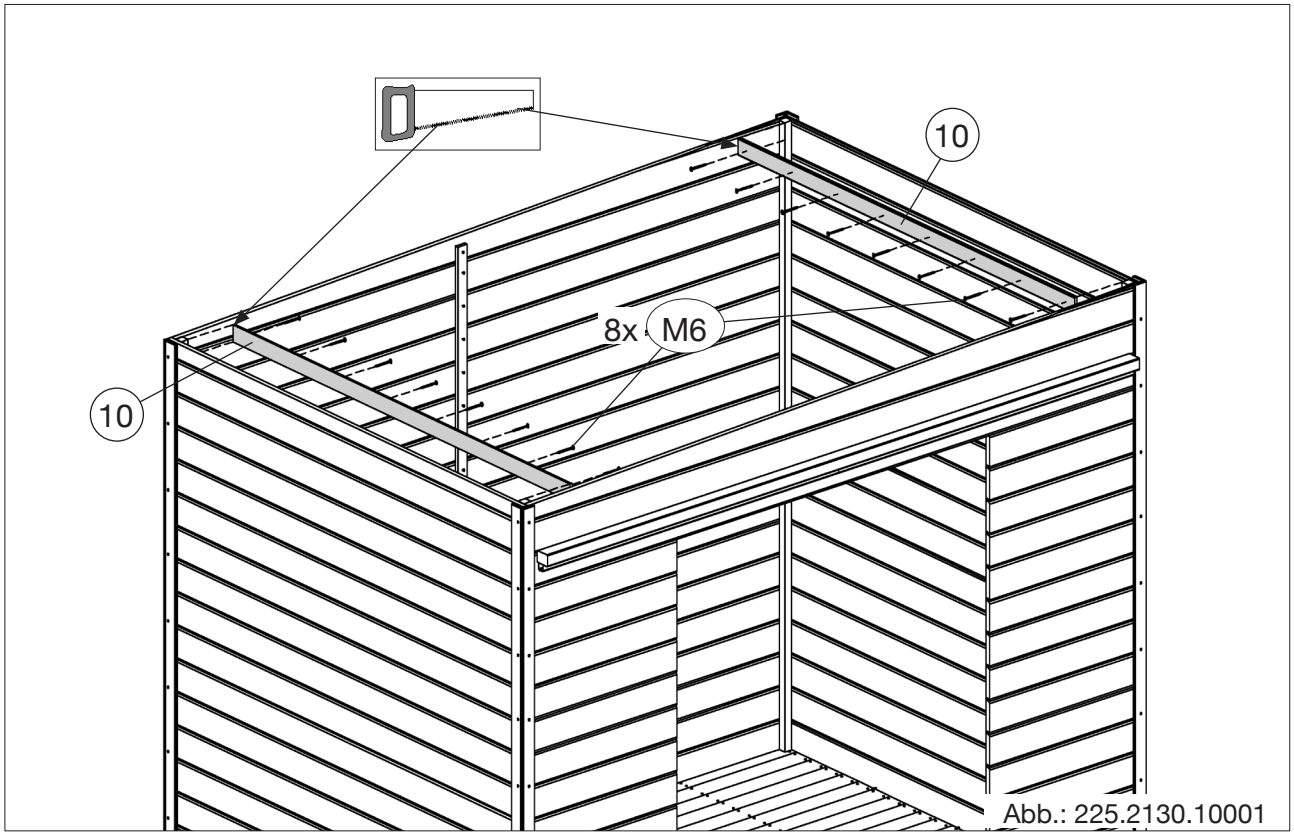

Abb.: 225.2130.10001

16

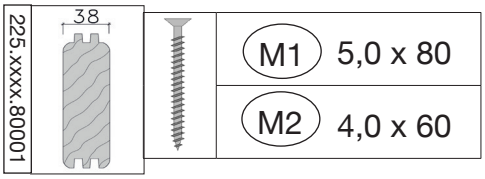

M1	5,0 x 80
M2	4,0 x 60

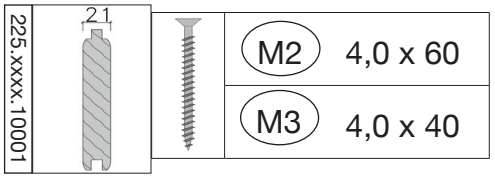

M2	4,0 x 60
M3	4,0 x 40

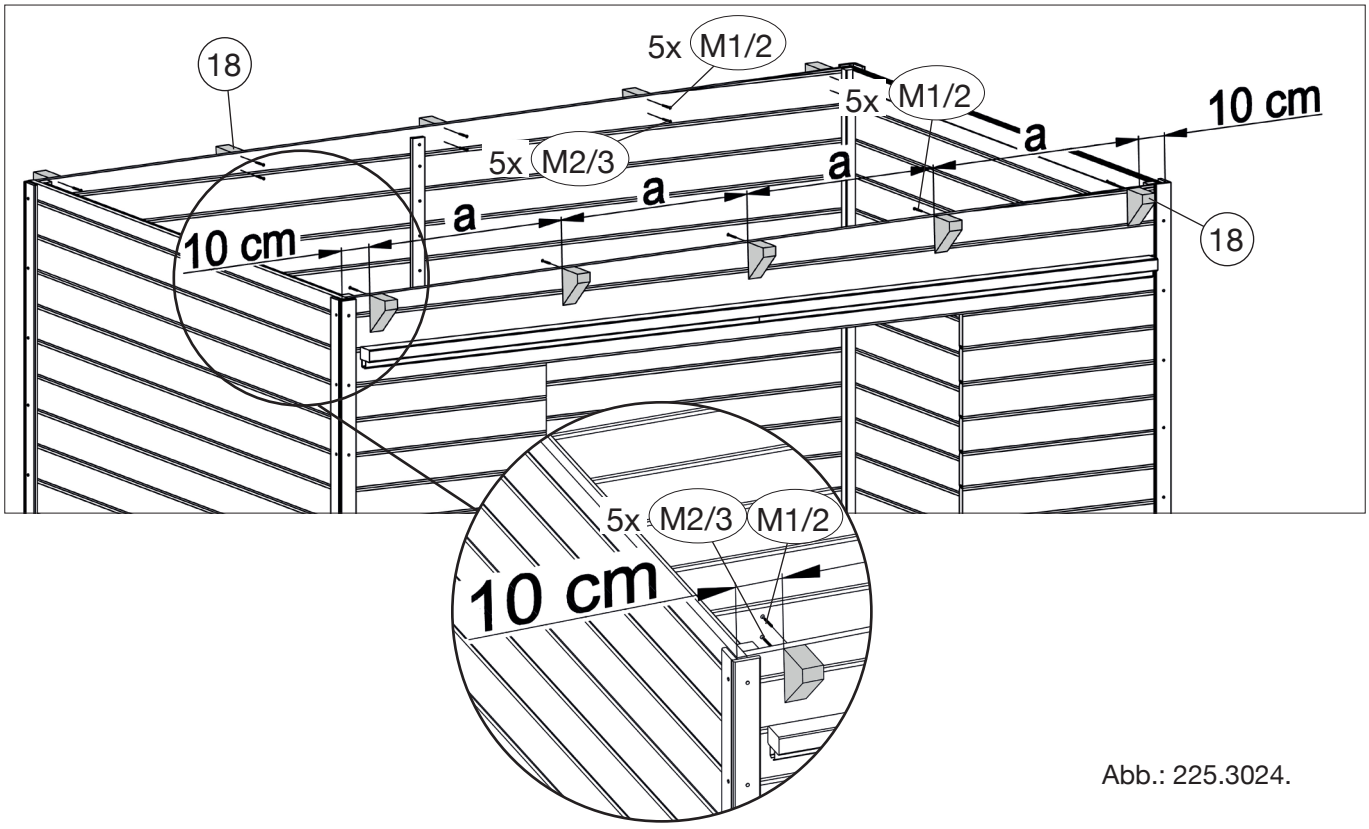

Abb.: 225.3024.

© Copyright HRB 3662

16.1

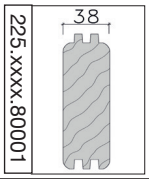

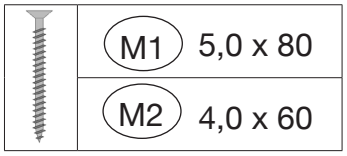

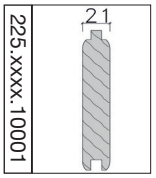

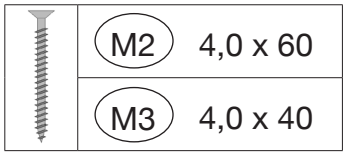

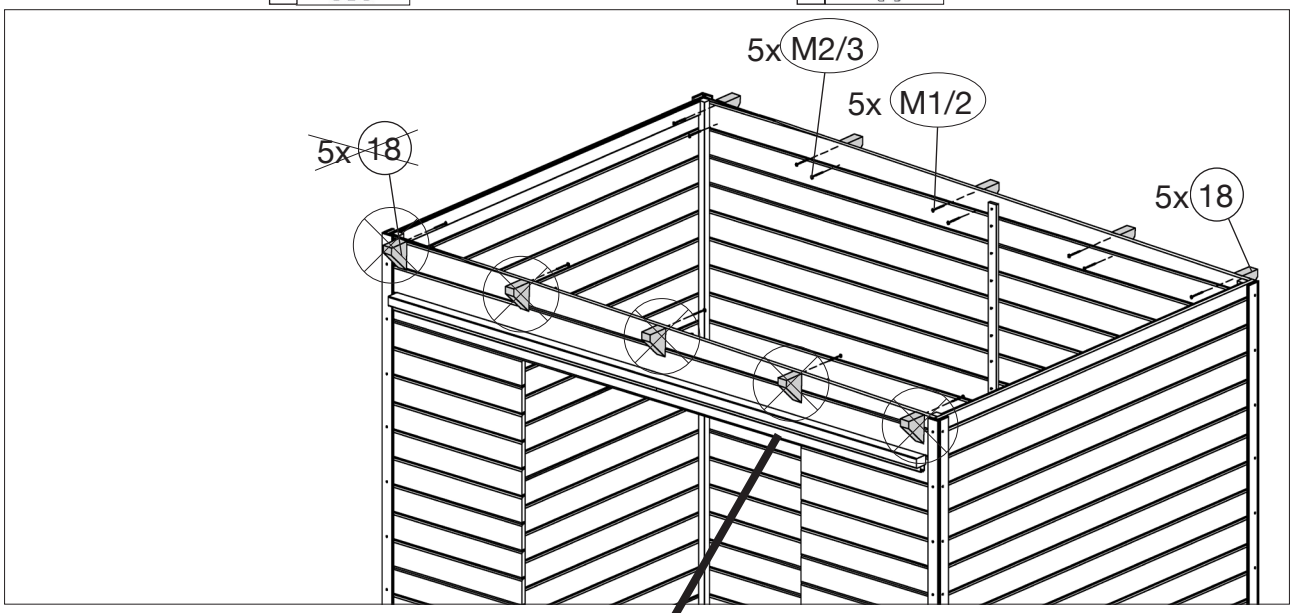

MA800.0286.17.68

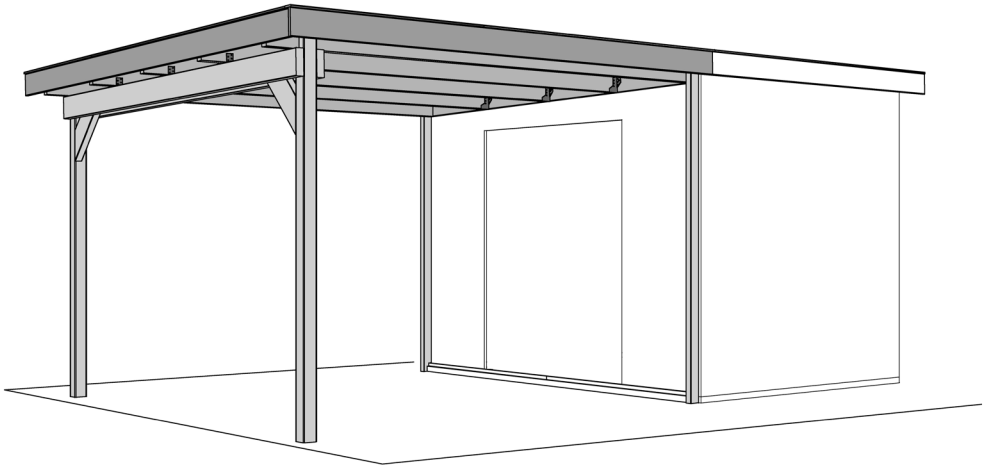

225.2130.10X01 / 80201
225.2430.10X01 / 80201
225.3030.10x01 / 80201

© Copyright HRB 3662

17

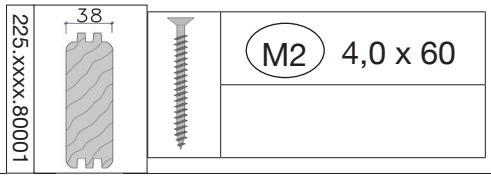

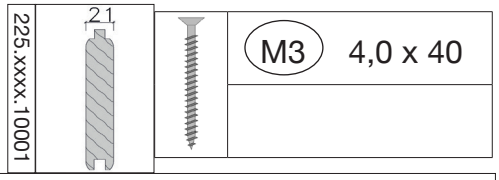

17.1

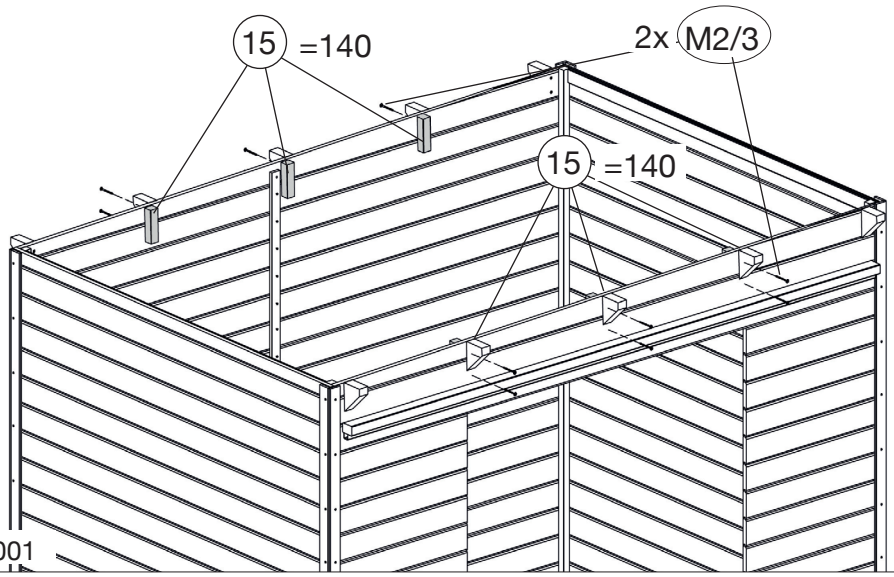

Abb.: 225.2130.10001

17.2

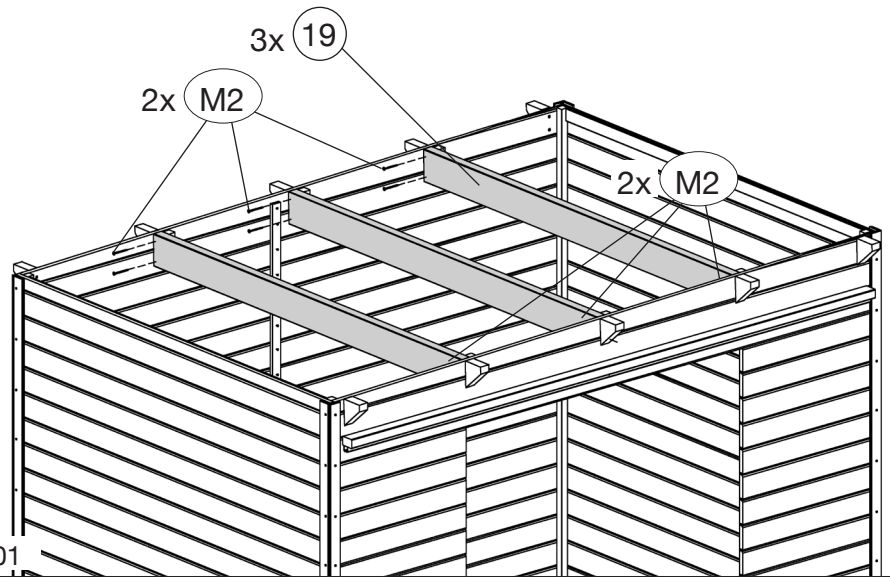

Abb.: 225.2130.10001

17.3

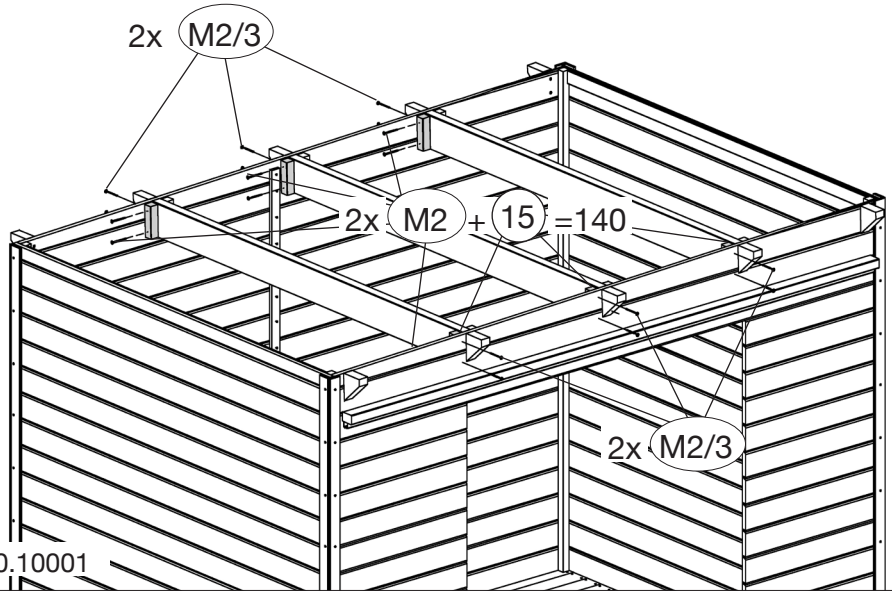

Abb.: 225.2130.10001

© Copyright HRB 3662

18

M7	2,2 x 55

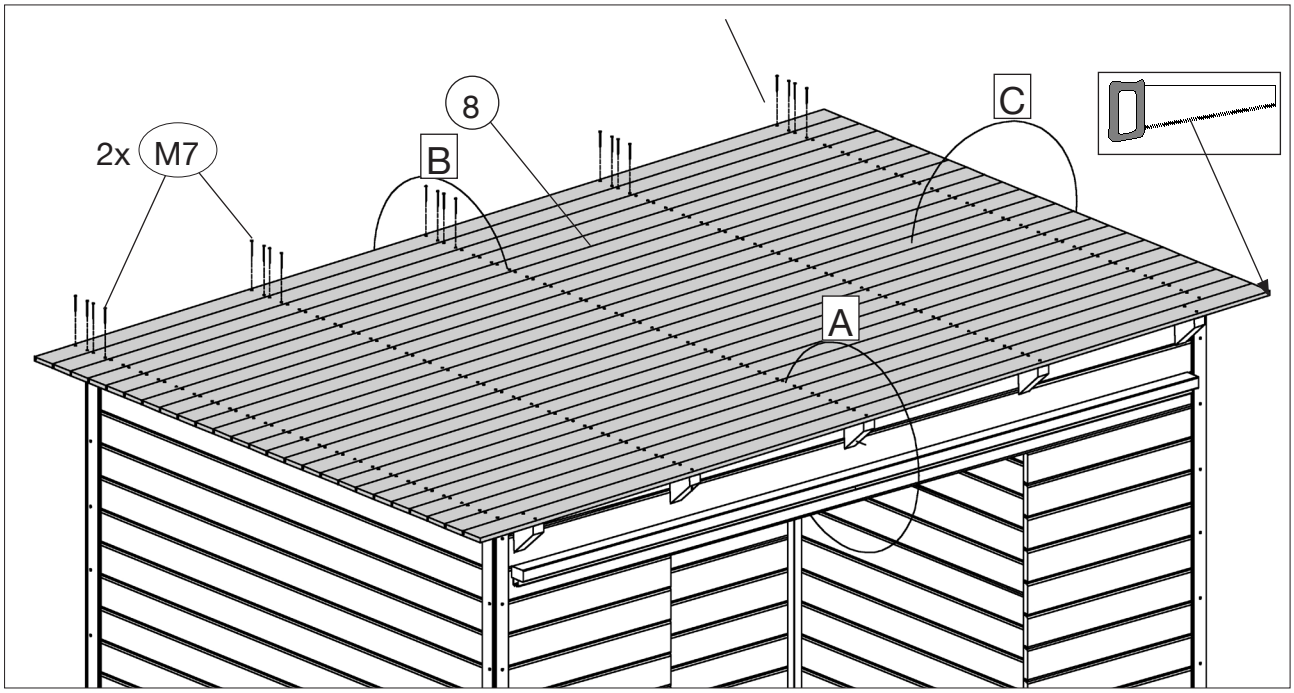

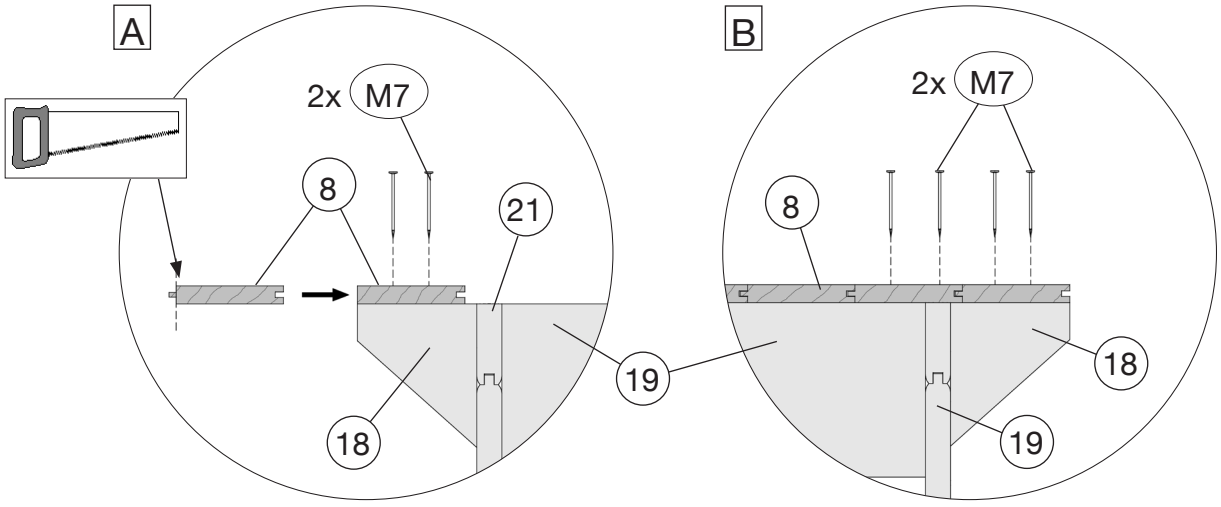

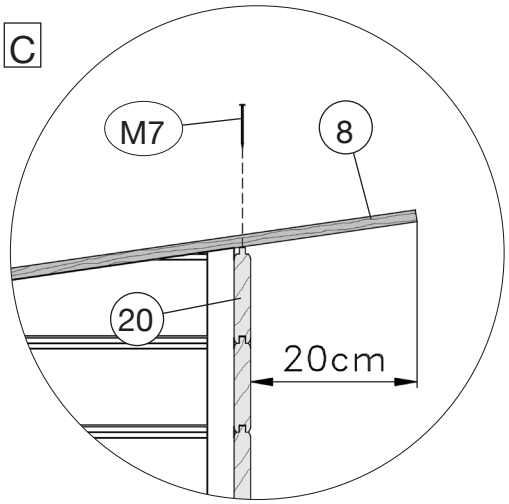

Abb.: 225.2130.10001

© Copyright HRB 3662

19

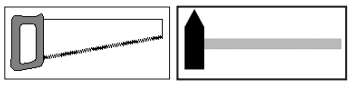

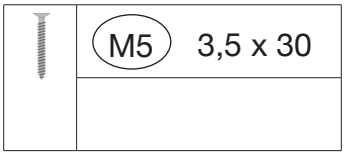

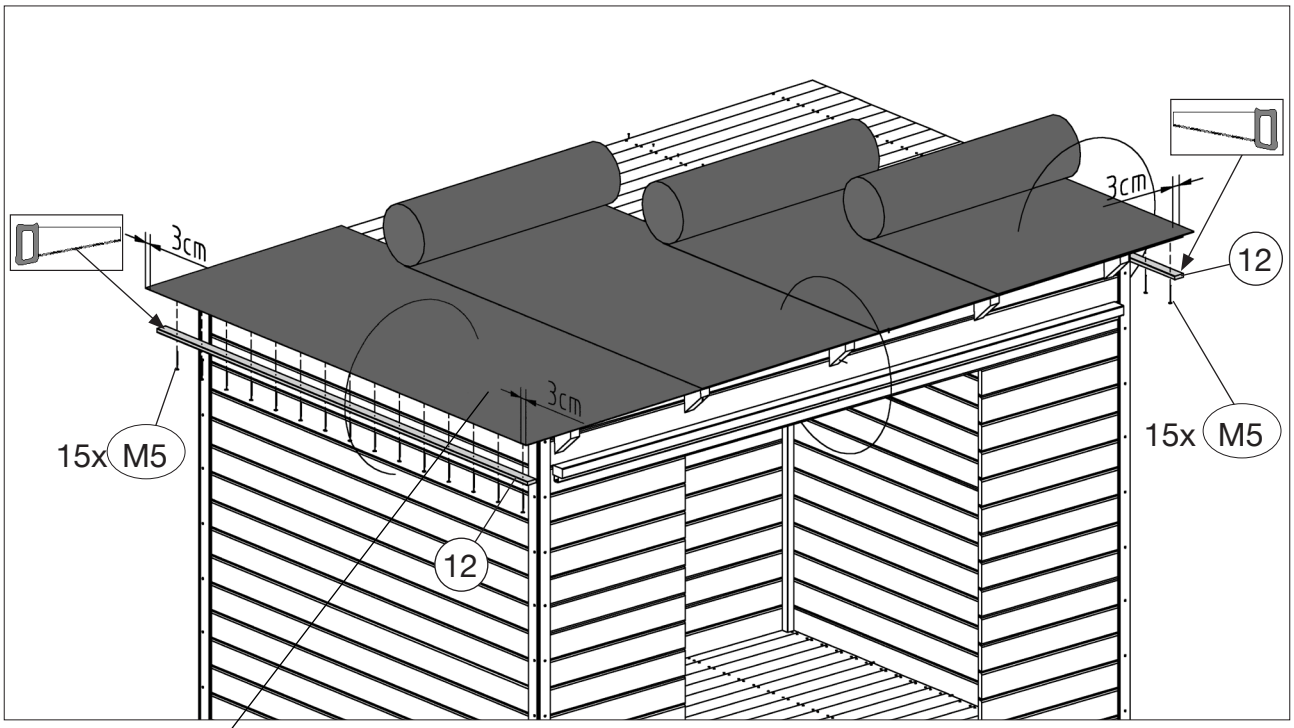

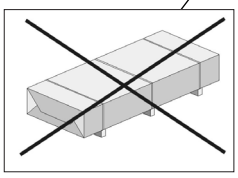

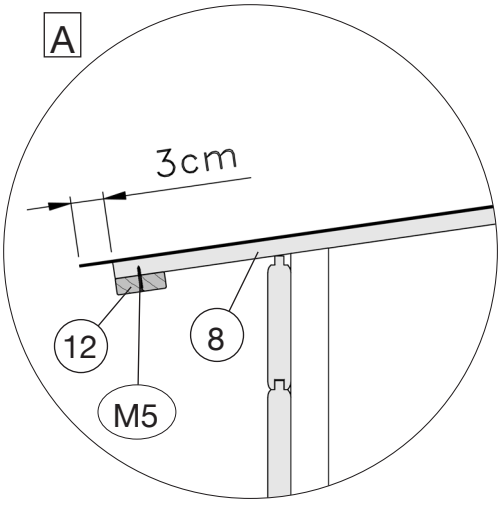

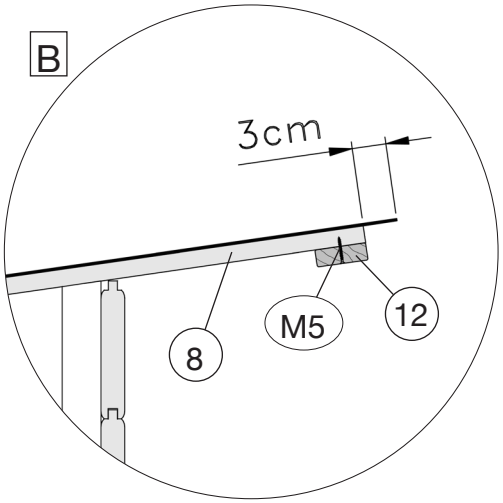

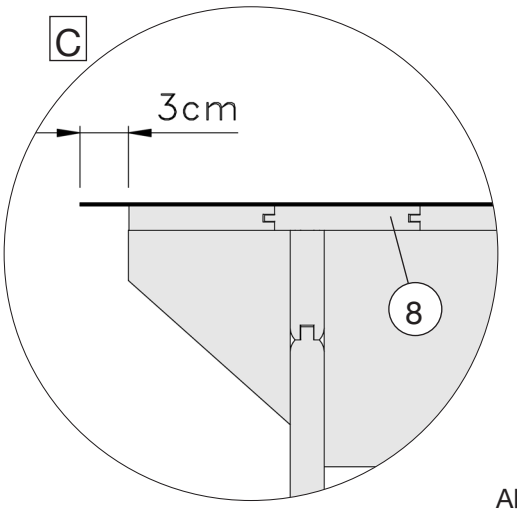

Abb.: 225.2130.1000

© Copyright HRB 3662

20

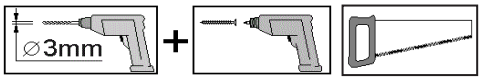

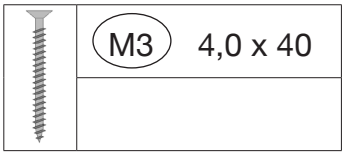

20.1

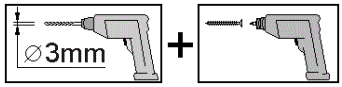

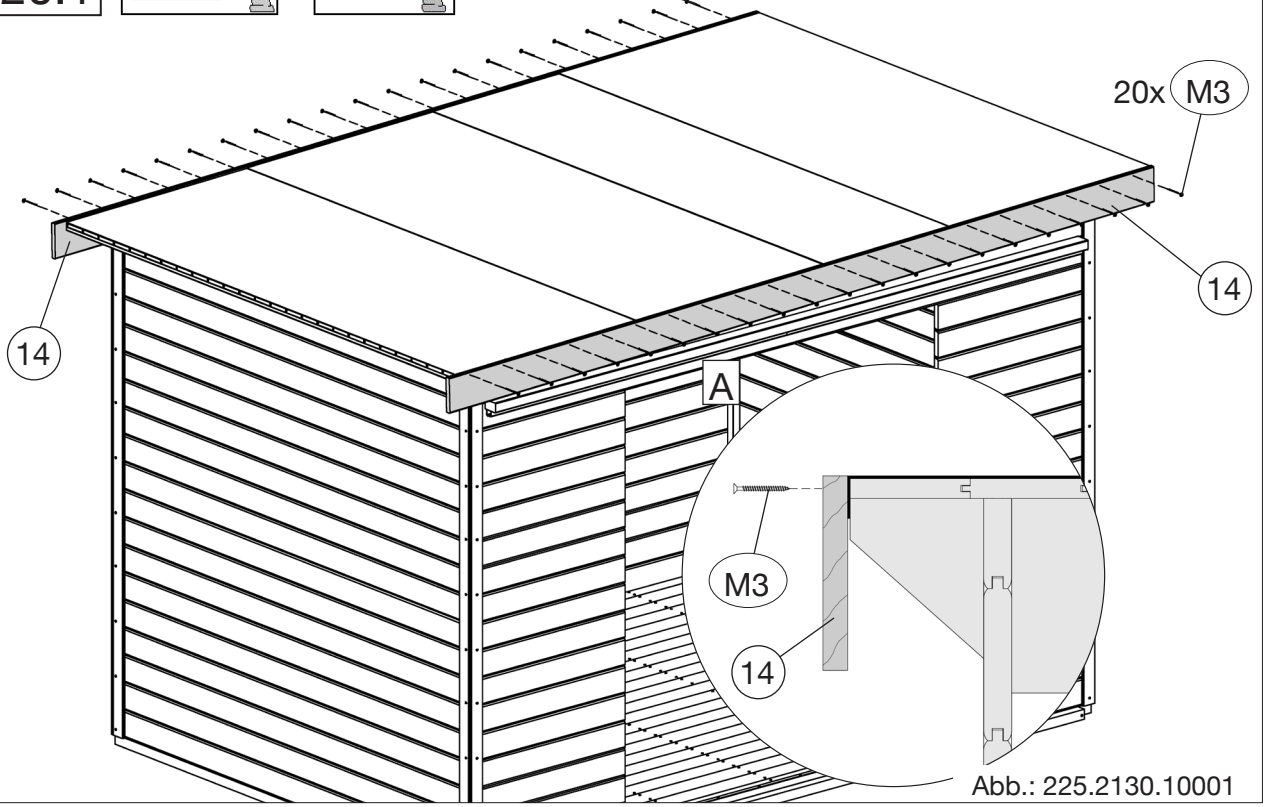

Abb.: 225.2130.10001

20.2

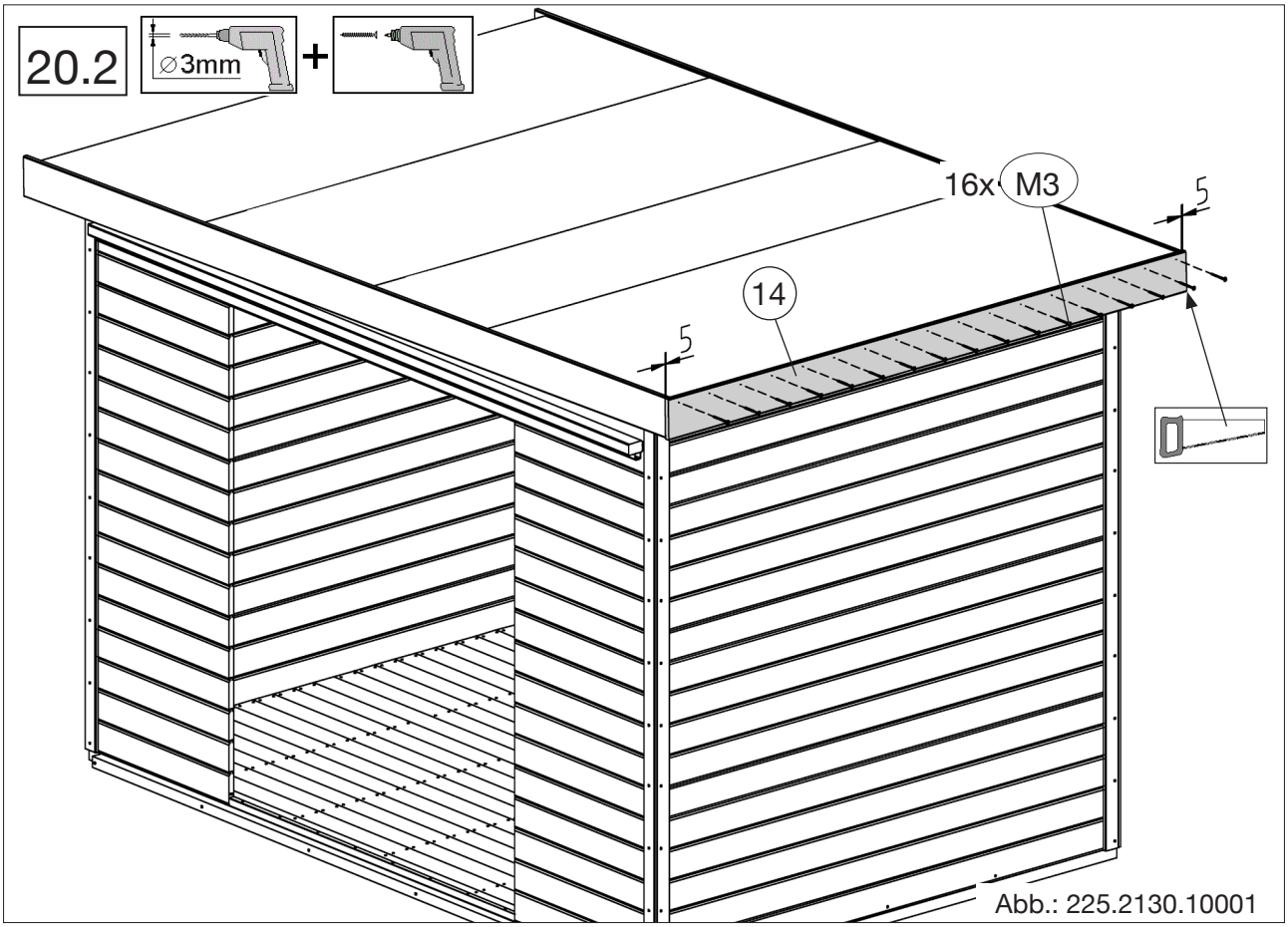

Abb.: 225.2130.10001

© Copyright HRB 3662

21

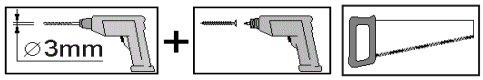

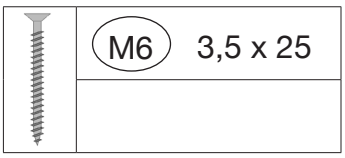

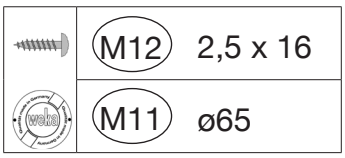

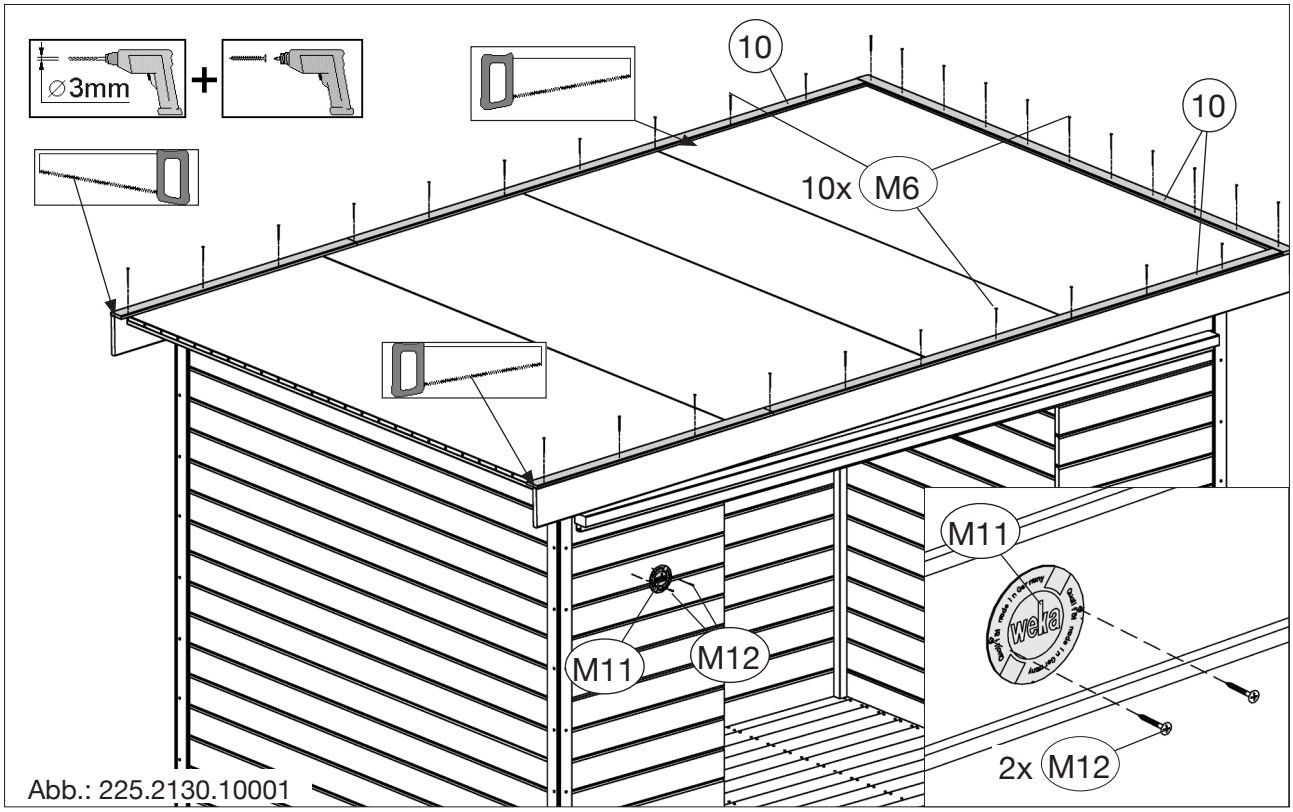

Abb.: 225.2130.10001

22

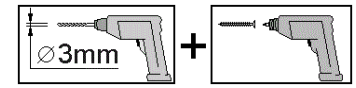

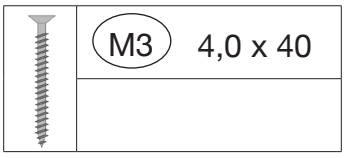

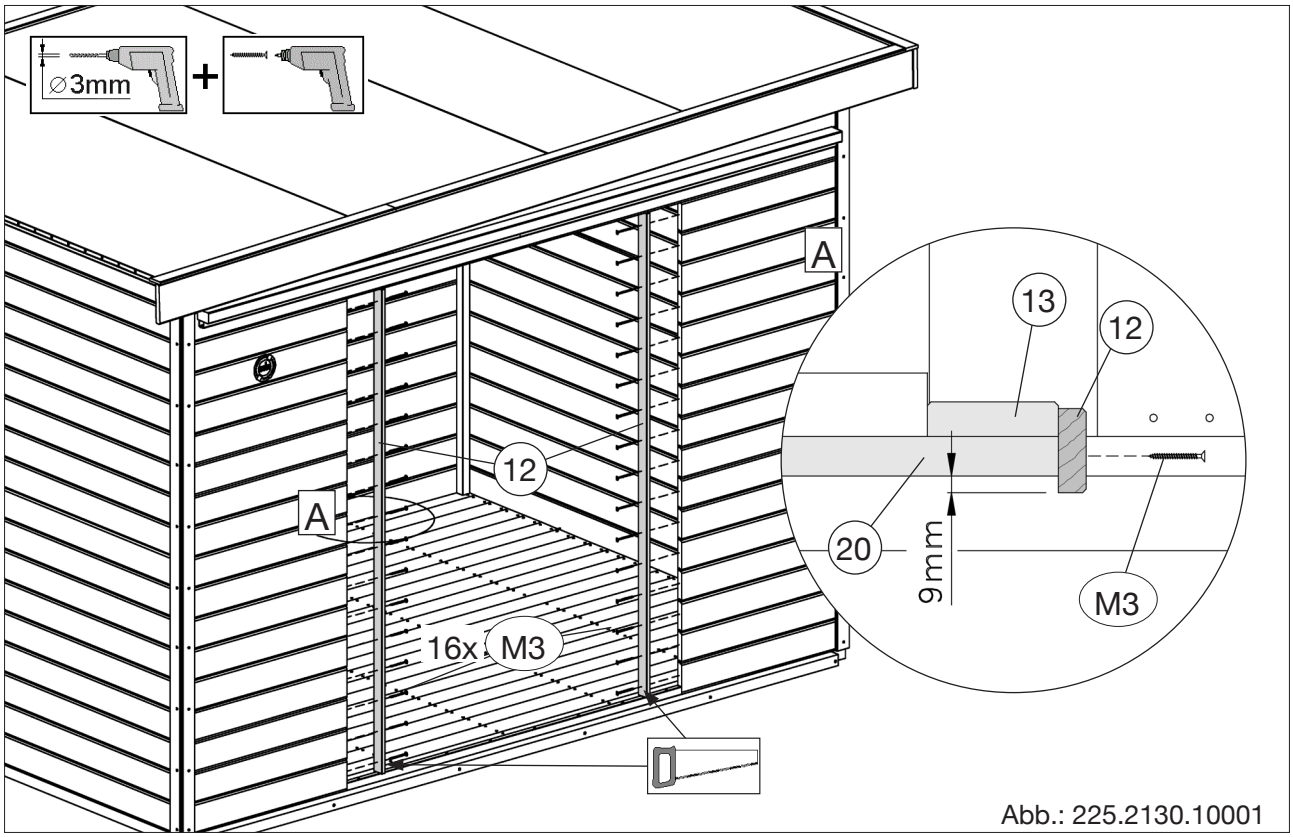

Abb.: 225.2130.10001

© Copyright HRB 3662

23

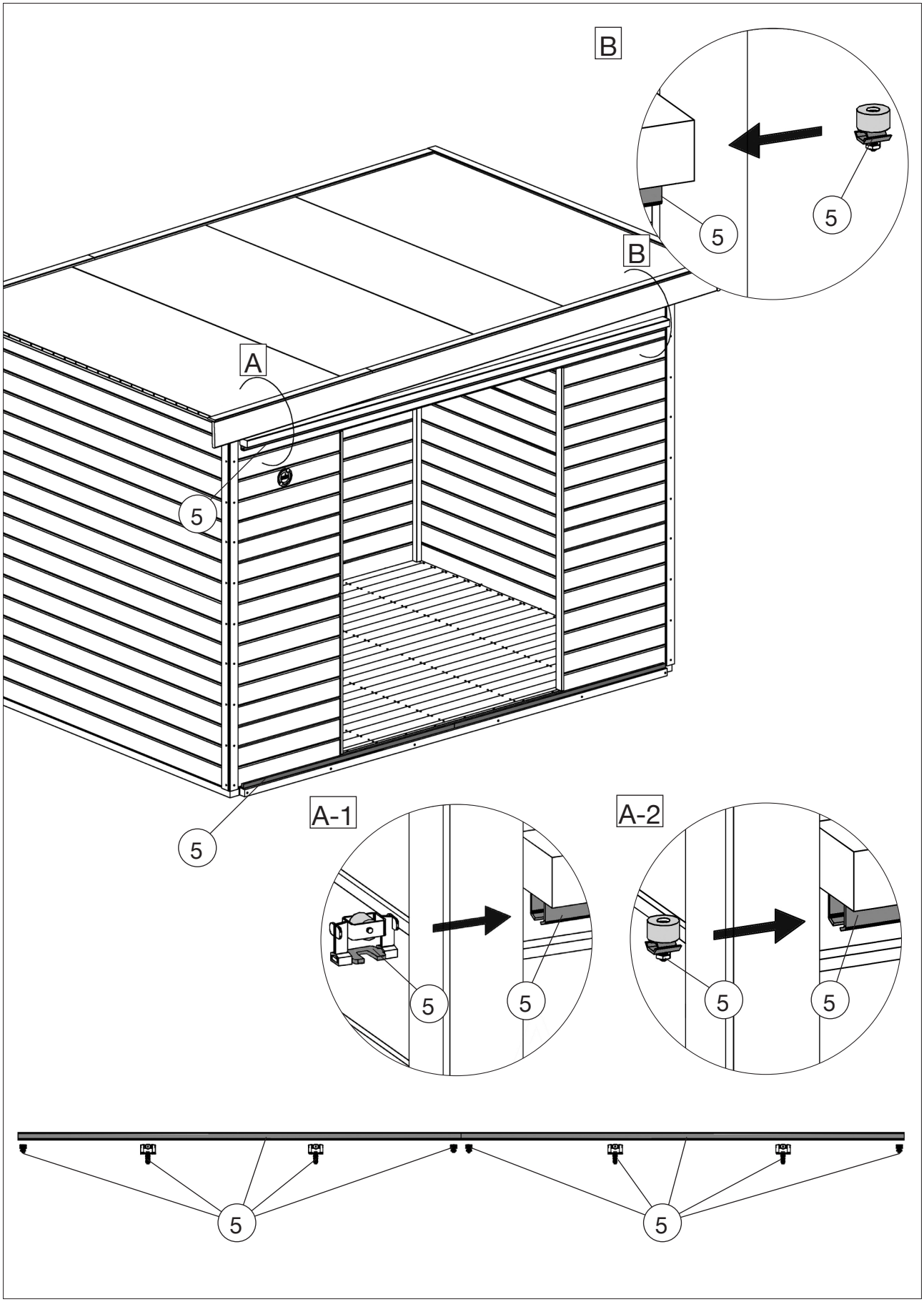

© Copyright HRB 3662

24

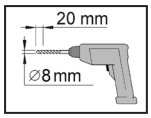

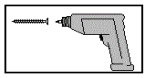

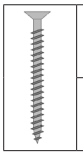

M3 4,0 x 40

24.1

A 1

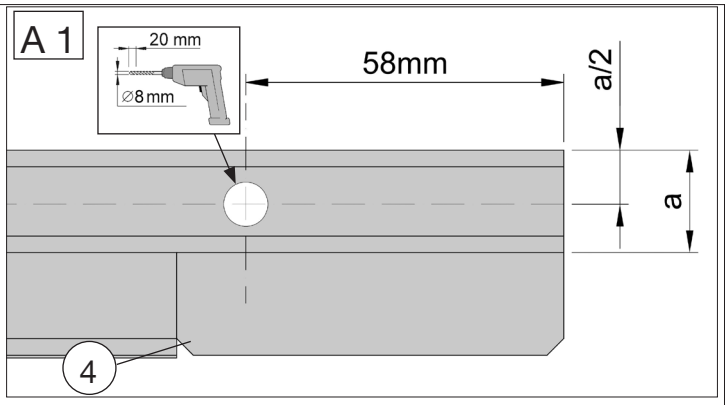

A 2

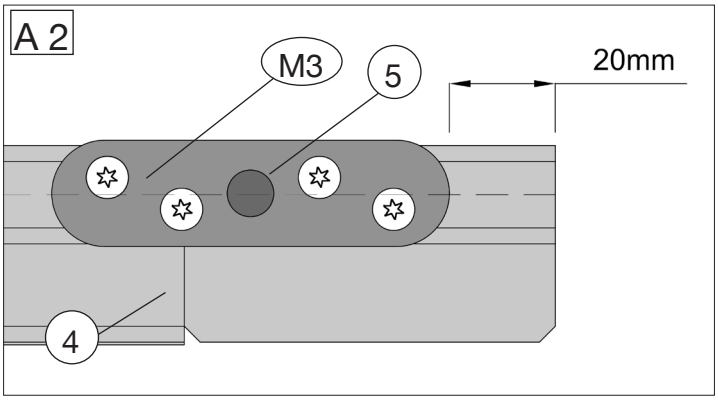

B

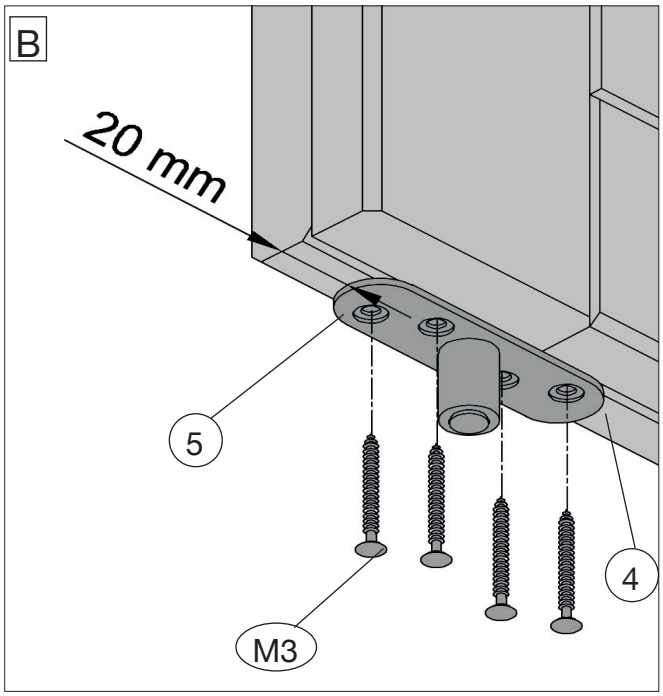

 © Copyright HRB 3662

24

24.2

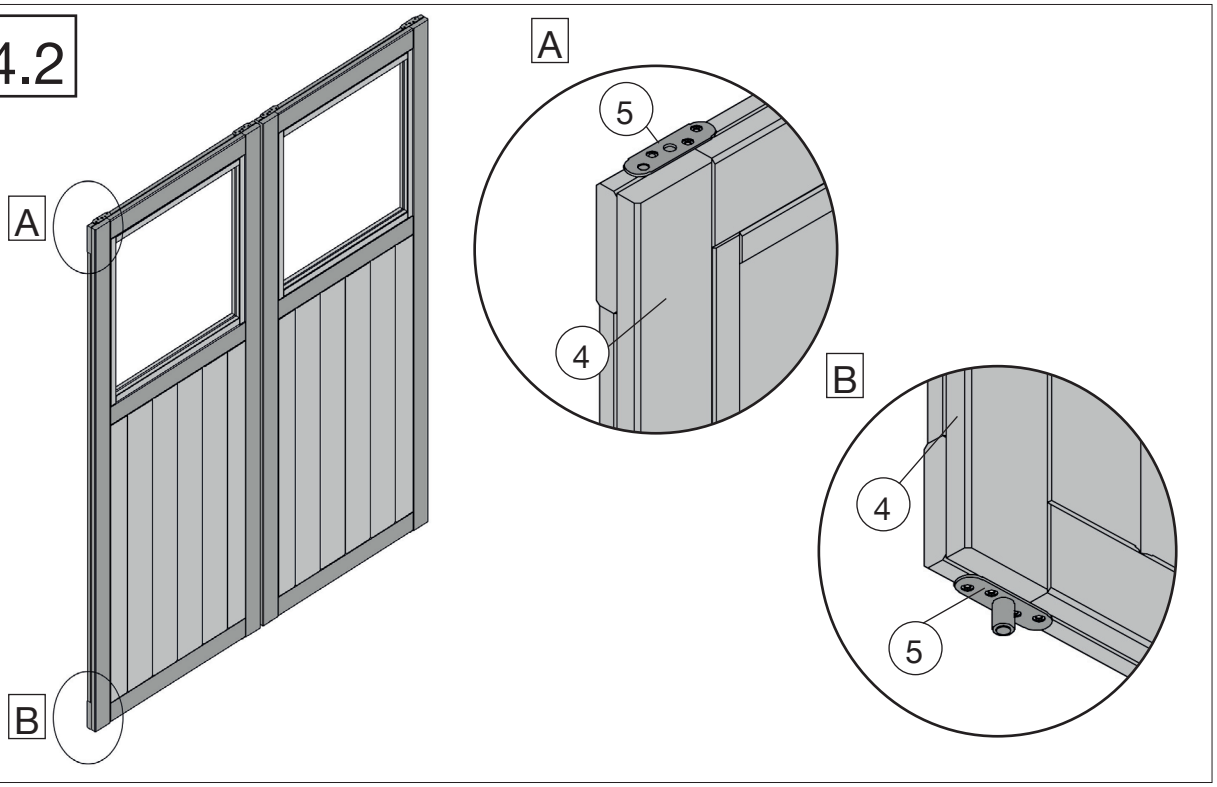

25

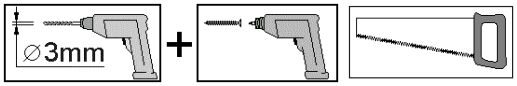

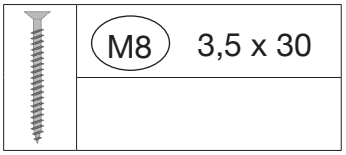

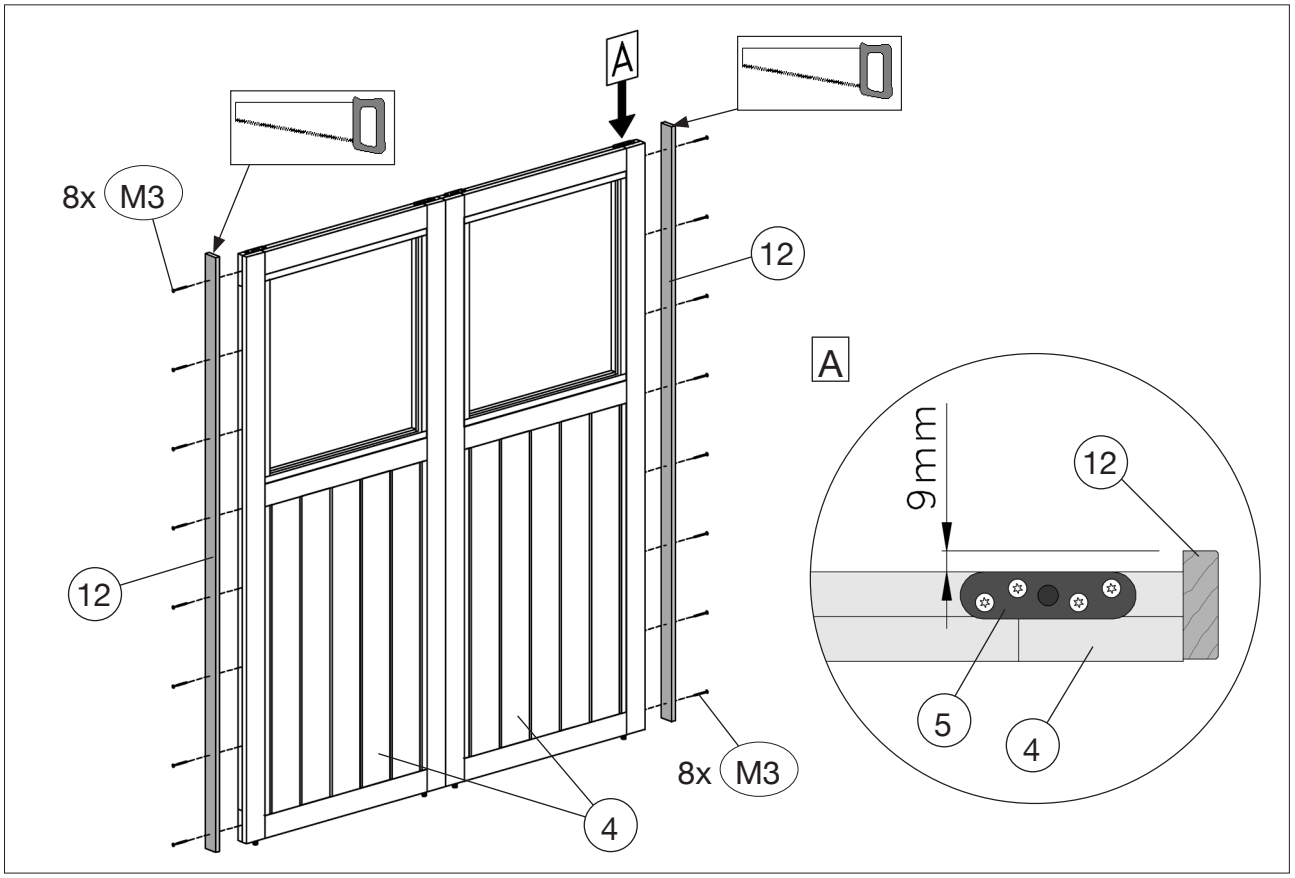

© Copyright HRB 3662

26

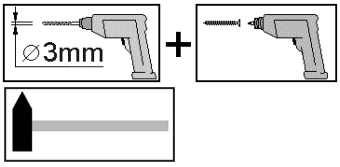

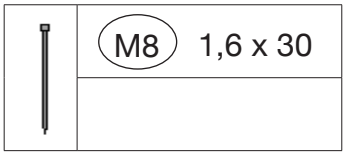

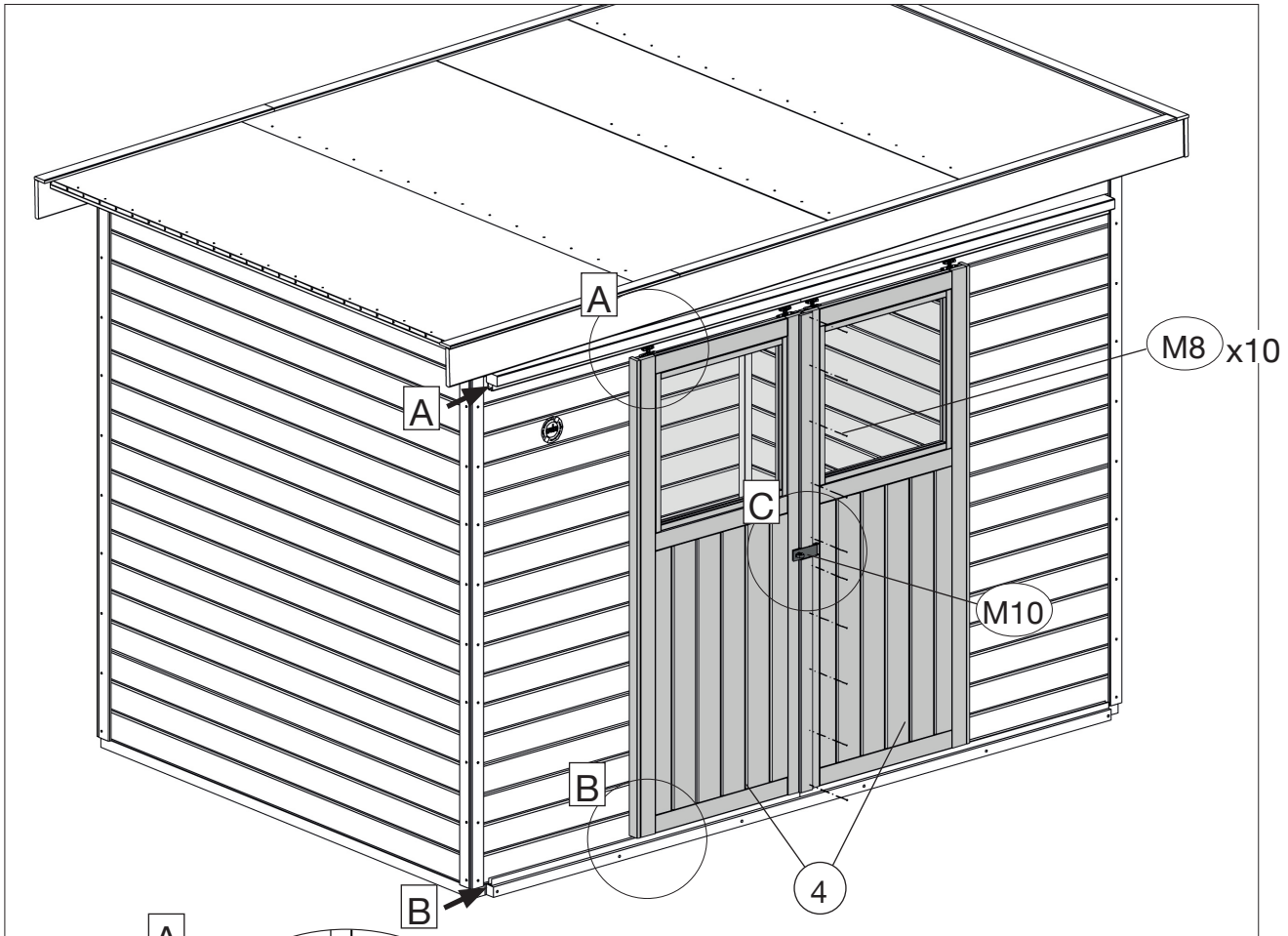

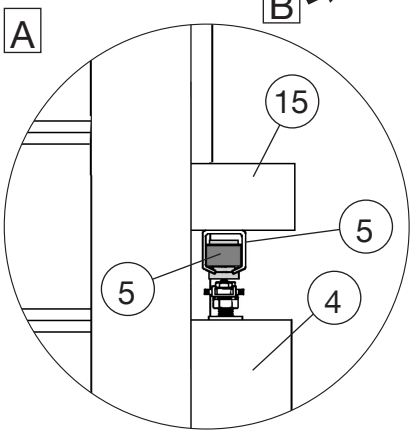

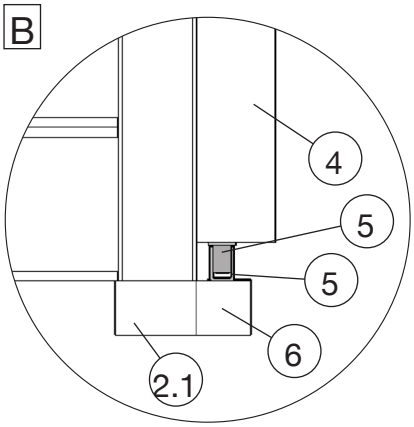

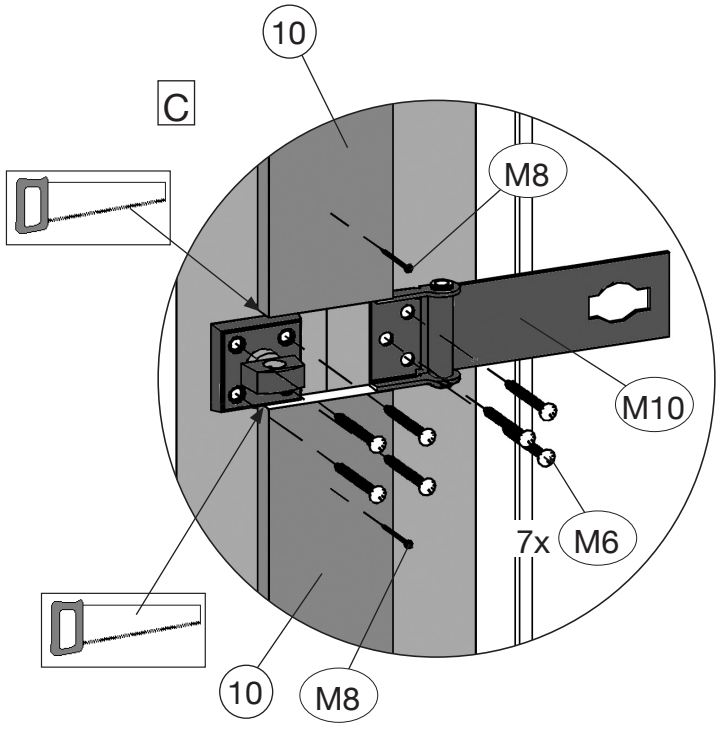

© Copyright HRB 3662

27

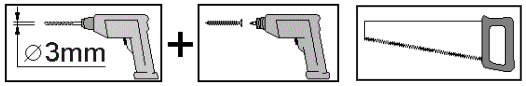

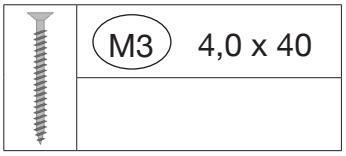

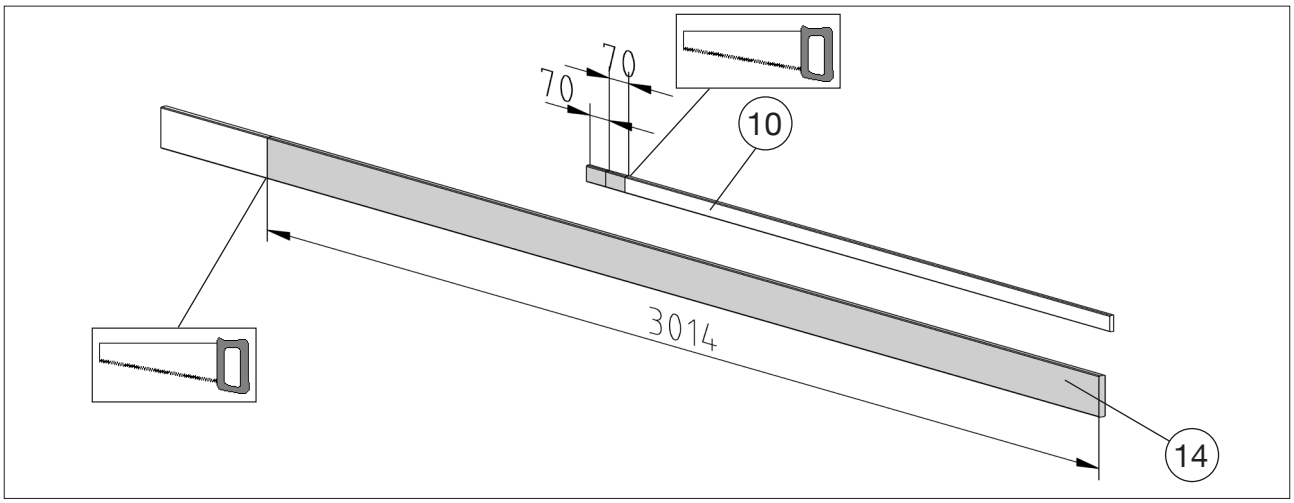

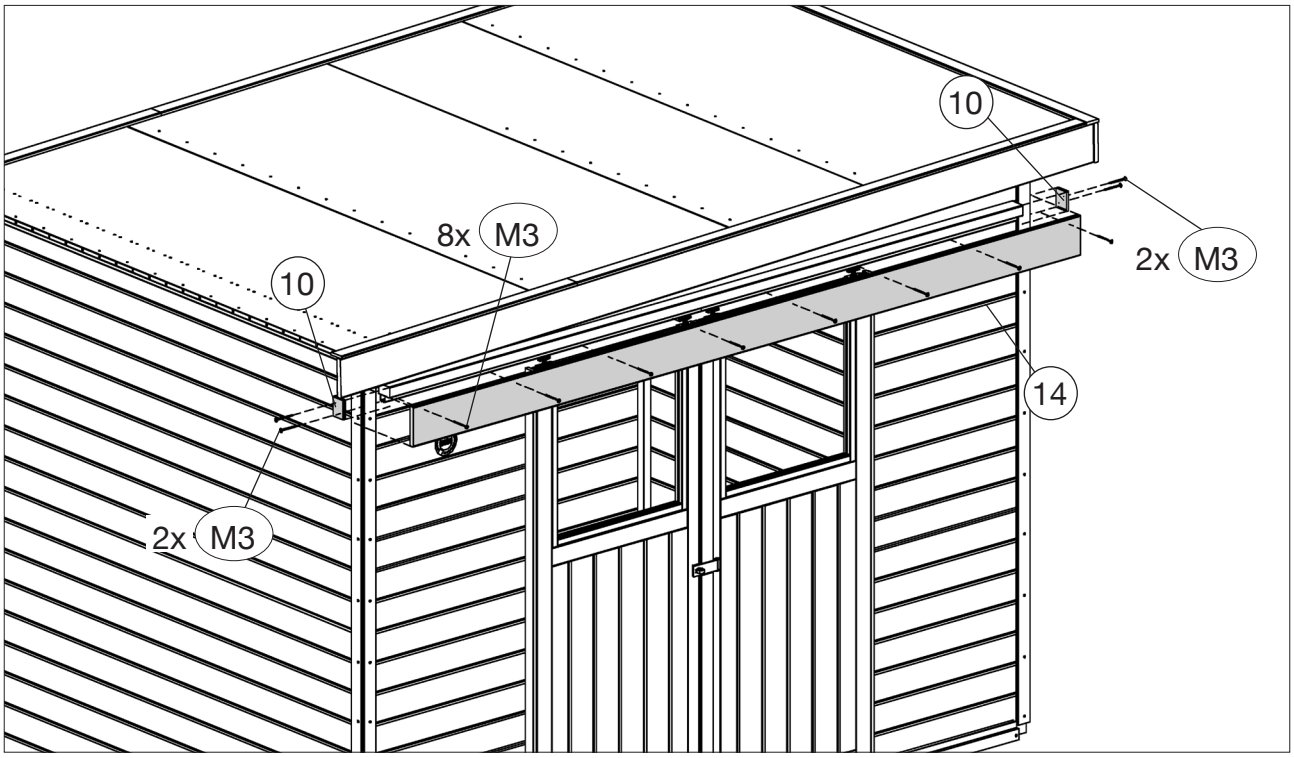

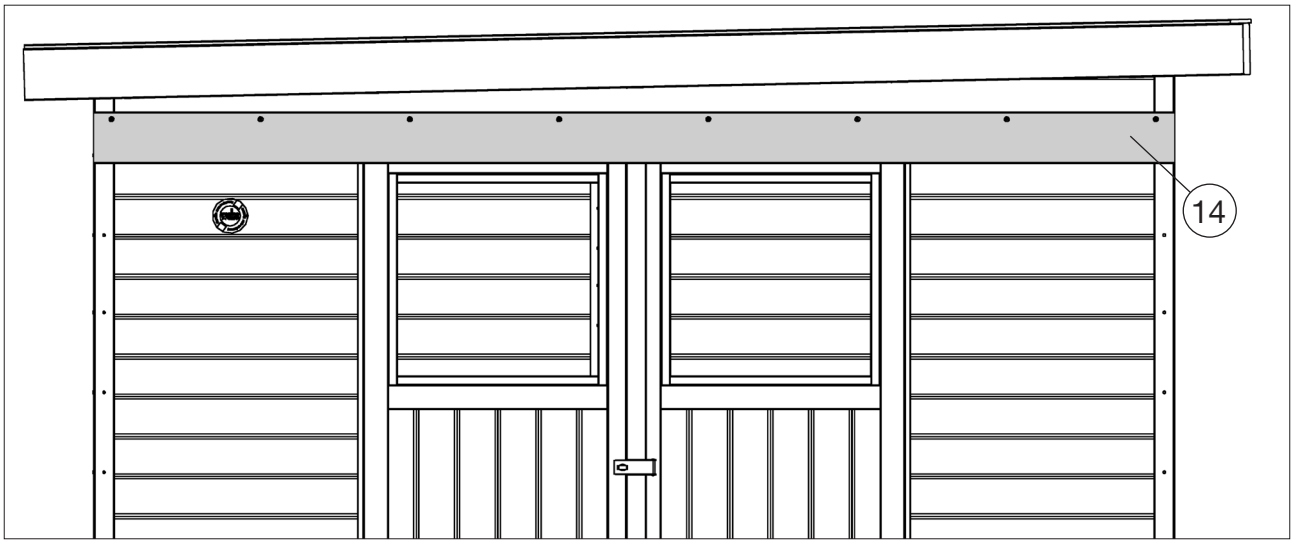

© Copyright HRB 3662

Notizen

© Copyright HRB 3662

www.weka-holzbau.com

WEKA Holzbau GmbH
Johannesstr. 16, 17034 Neubrandenburg
Tel.: +49 (0)395 42908-0
Fax: +49 (0)395 42908-83
Mail: info@weka-holzbau.com
Web: www.weka-holzbau.com
MA Art.-Nr.: 800.0286.17.67

© Copyright HRB 3662

www.weka-holzbau.com

Seitlicher Dachanbau

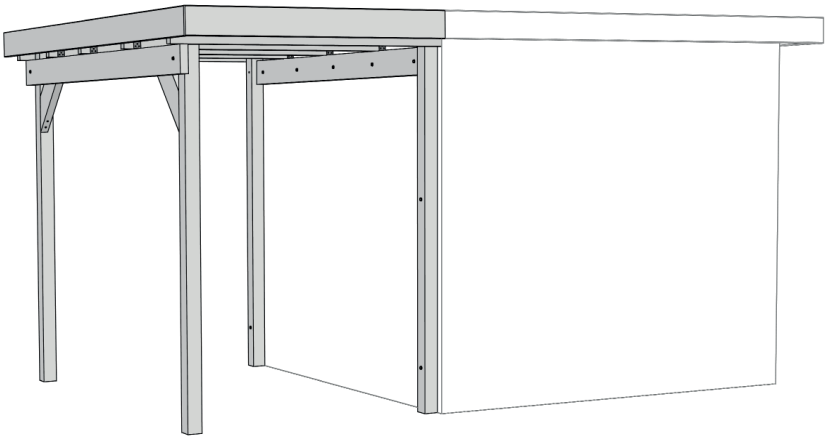

100.2830.10025

Montage-, Bedienungs- und Wartungsanleitung

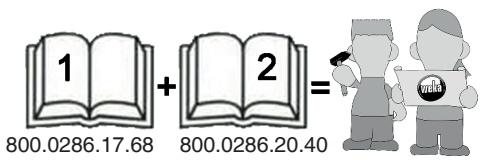

800.0286.17.68 800.0286.20.40

Stand: 2102

Pos	Bild	Abmessung (mm)	Anzahl (Stück)
-	-	-	-
2	G100.14.0056 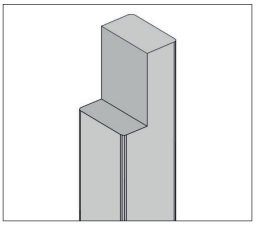	80/80/2200	2
3	G100.14.0057 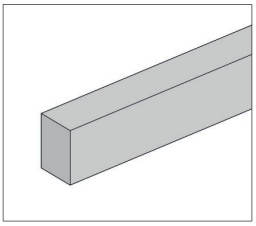	45/70/2294	2
4	R002.0350.3100 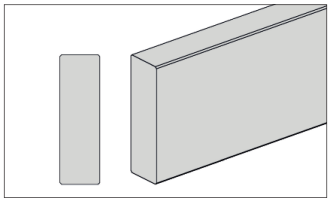	45/146/3100	5
5	R002.0350.2950 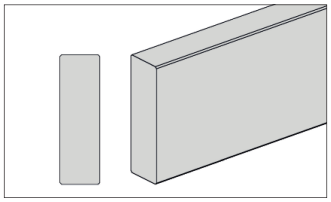	45/146/2950	2
6	G100.04.0083 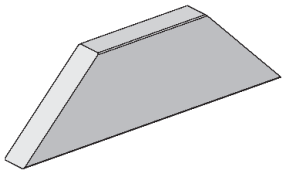	45/146/500	2
7	R002.0091.3344 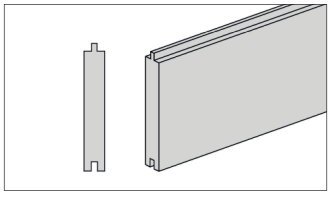	15,5/96/3344	35

© Copyright HRB 3662

Pos	Bild	Abmessung (mm)	Anzahl (Stück)
8	R002.0560.3140 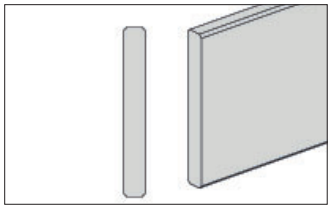	18,5/146/3140	2
9	R002.0400.1825 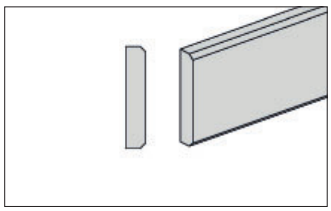	11/58/1825	2
10	R002.0530.2300 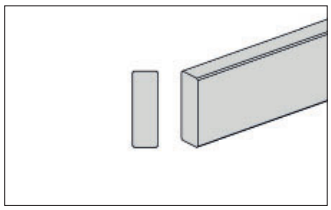	15/45/2300	3

© Copyright HRB 3662

Pos	Bild	Abmessung (mm)	Anzahl (Stück)
M1	K001.3035.0004	3,5 x 30	75
M2	K001.8050.0004	5,0 x 80	4
M3	K001.1050.0004 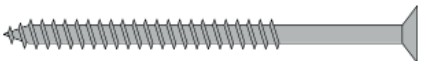	5,0 x 100	12
M4	K001.1250.0004 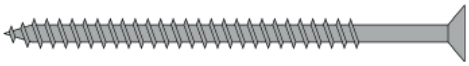	5,0 x 120	4
M5	K002.2050.0004 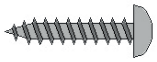	5,0 x 20	80
M6	K002.4050.0004	5,0 x 40	30
M7	K008.1108.0001	8,0 x 110	8
M8	K008.1808.0001	8,0 x 180	4
M9	K020.8400.0001	2/24/8,4	24
M10	K024.0800.0001	M8	12
M11	K031.5050.0001	50/50/40	6
M12	K074.4513.0000	0/45/137	3
M13	K010.5022.0001	2,2 x 55	300

© Copyright HRB 3662

1

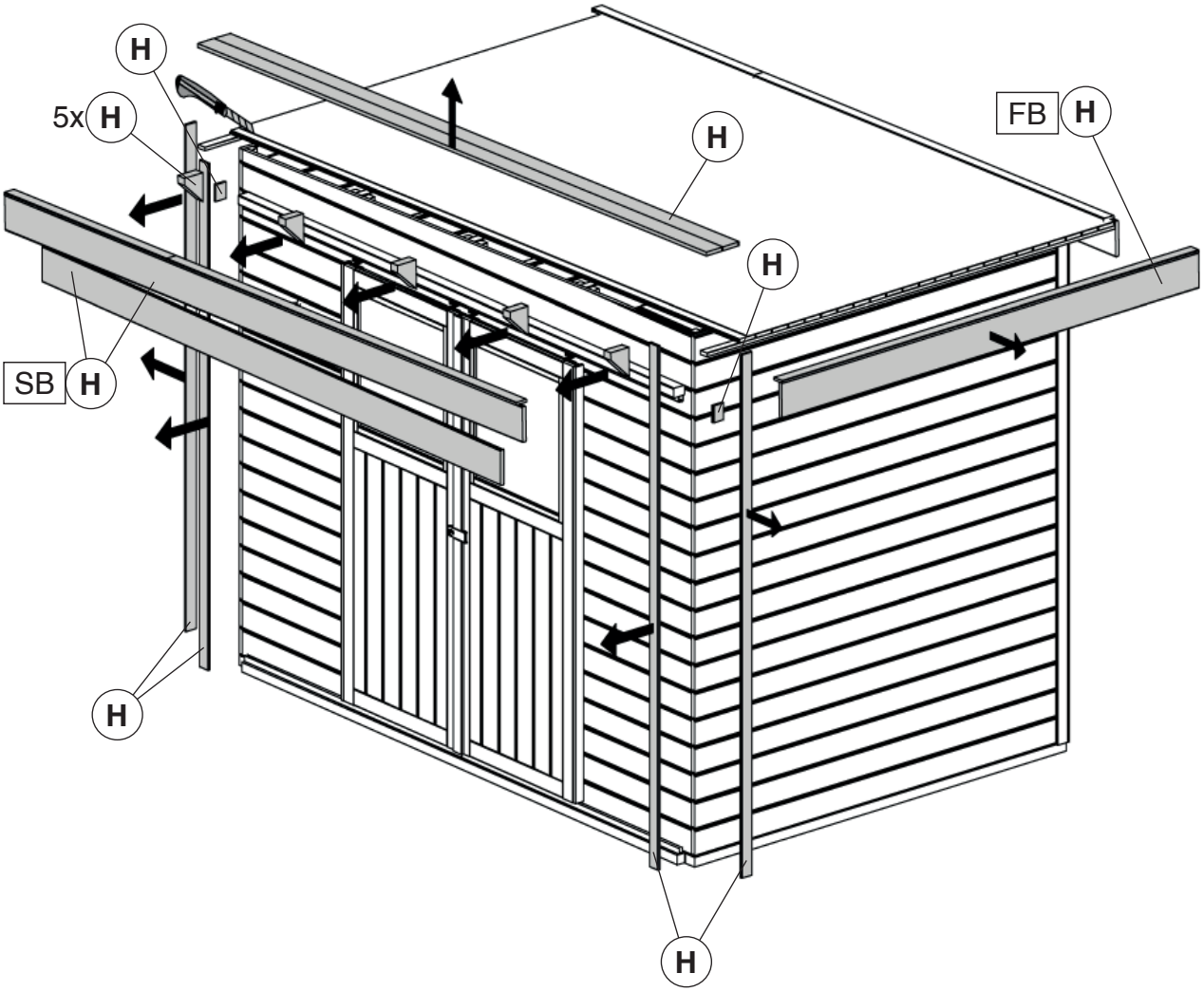

 © Copyright HRB 3662

2

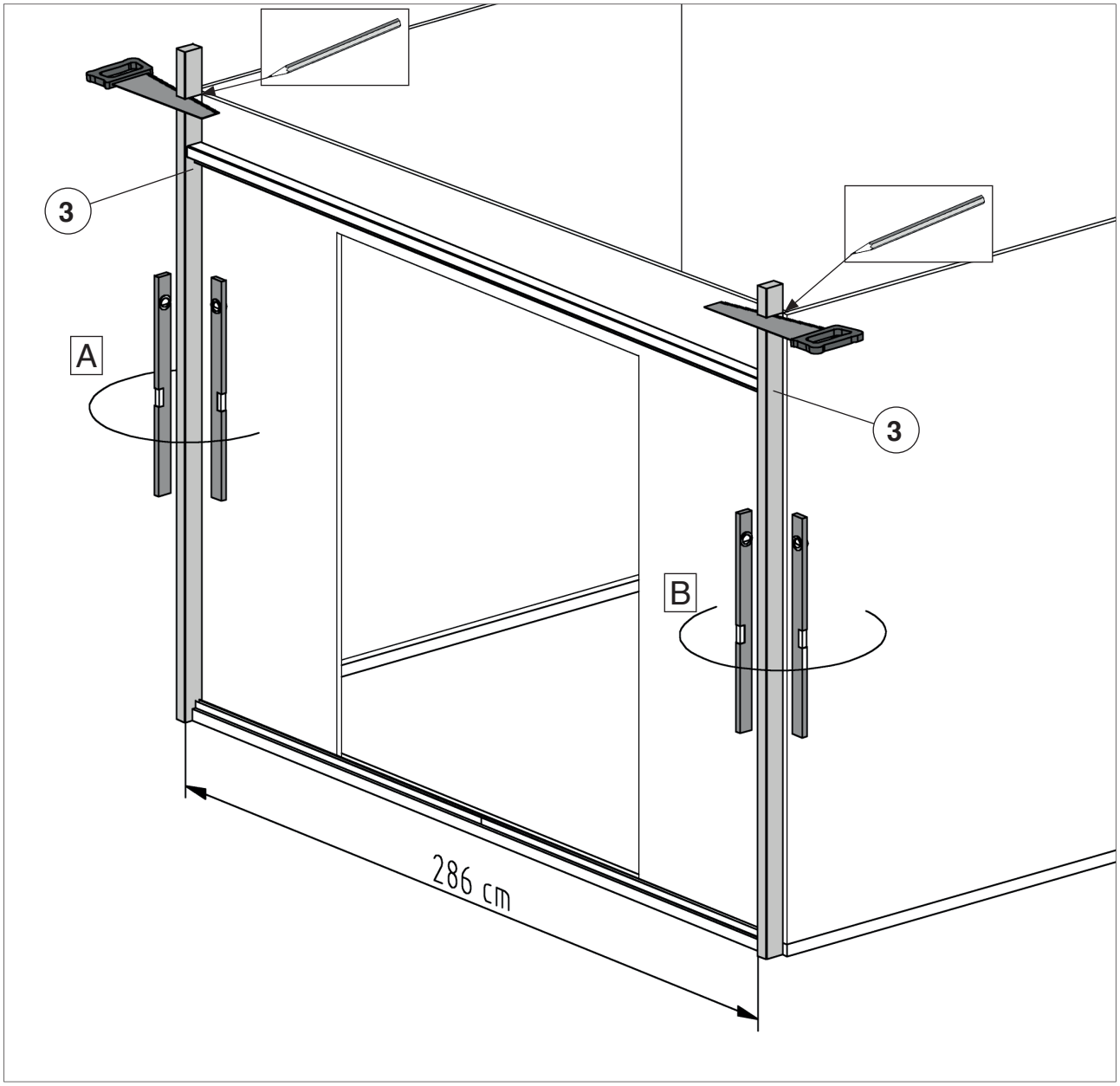

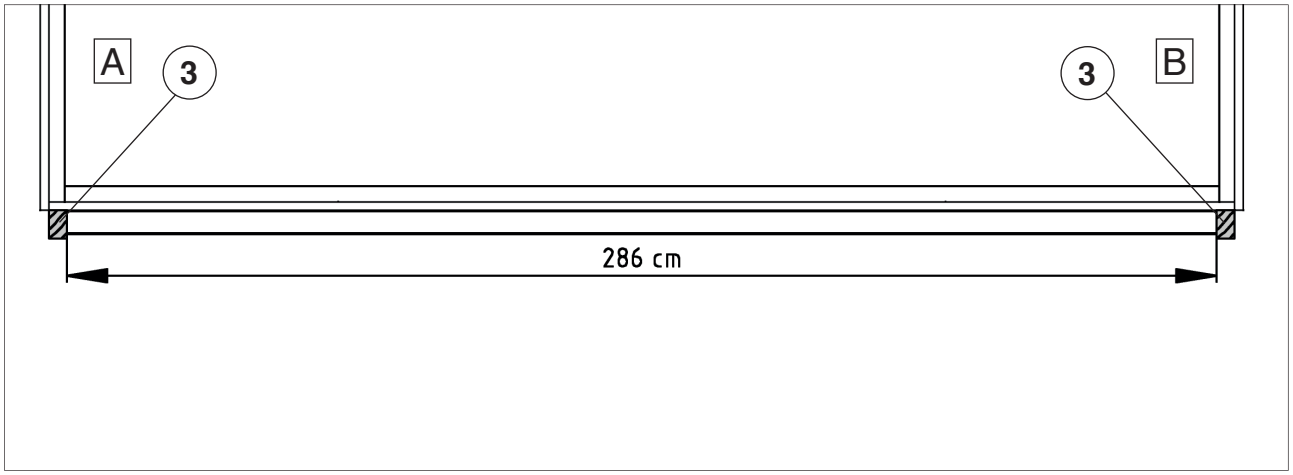

 © Copyright HRB 3662

3

Pfosten an Rückwand (Abb.2 A)

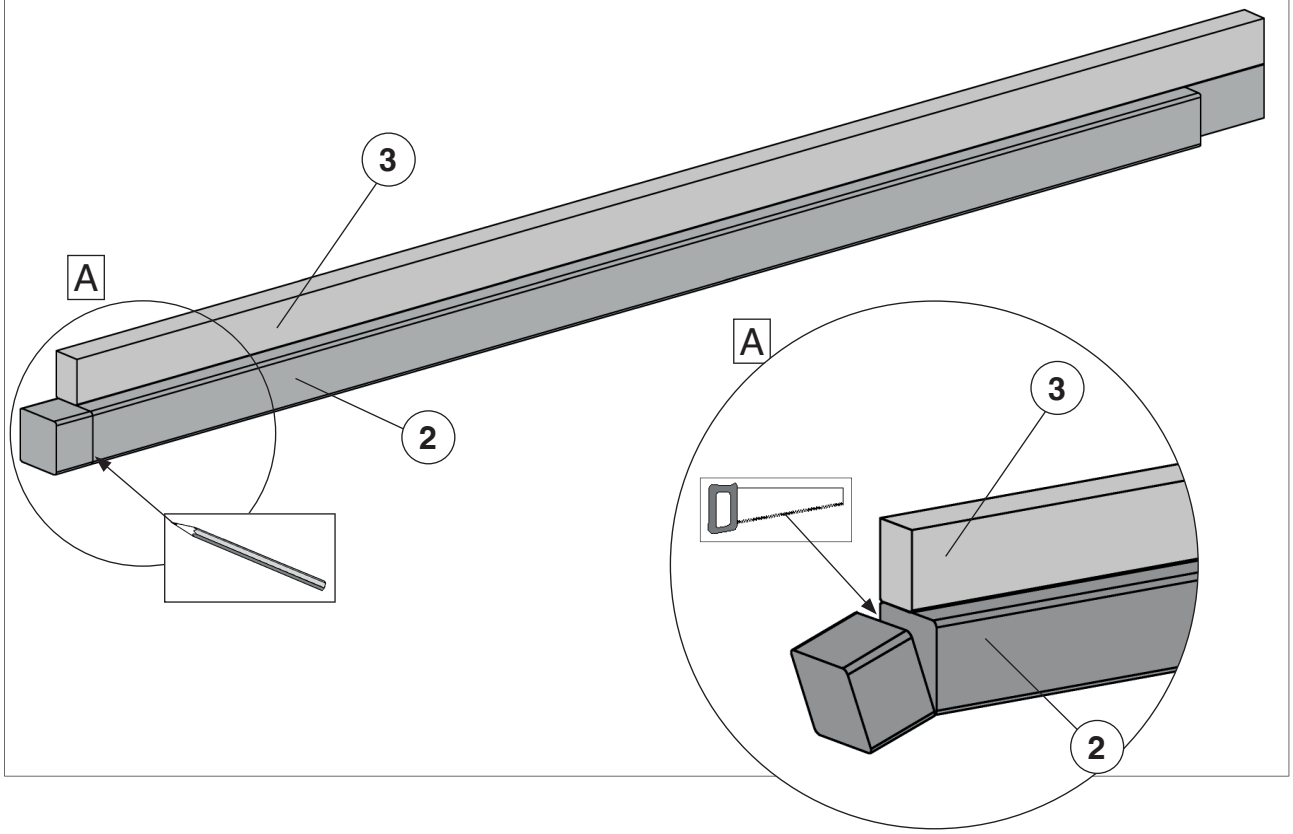

Pfosten an Frontwand (Abb.2 B)

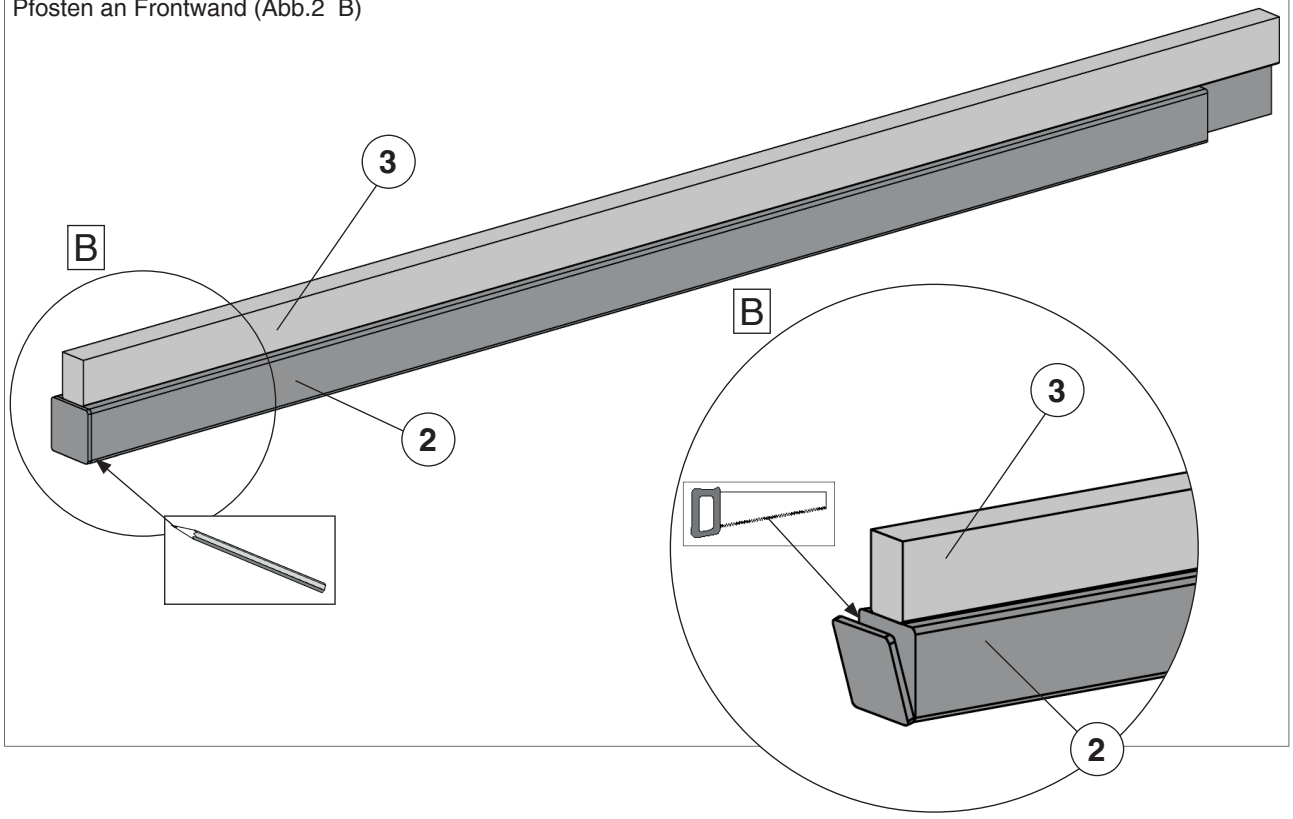

 © Copyright HRB 3662

4

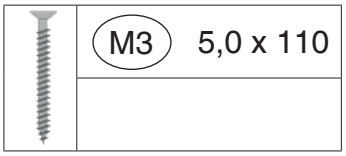

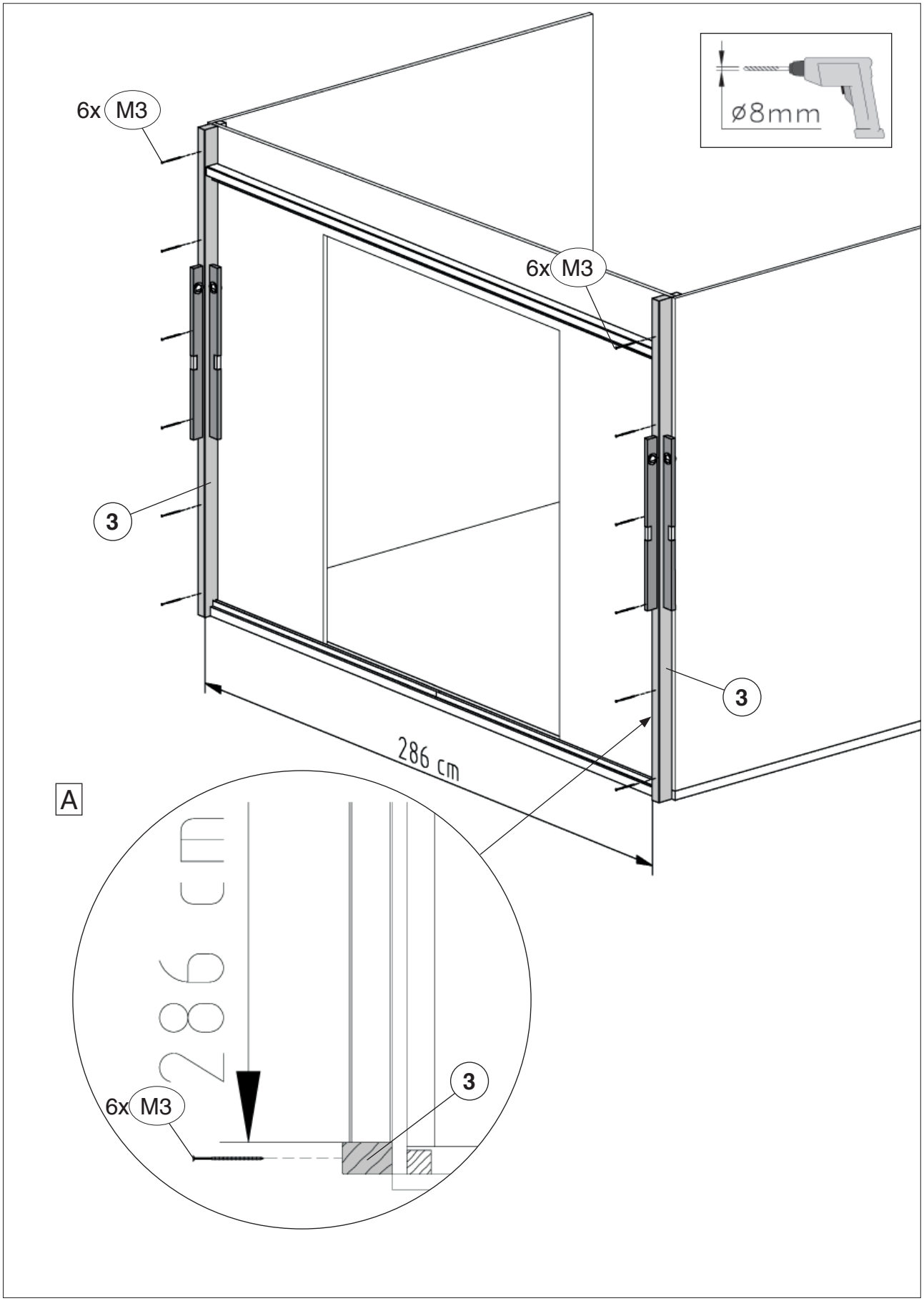

© Copyright HRB 3662

5

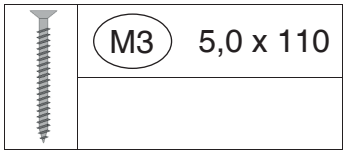

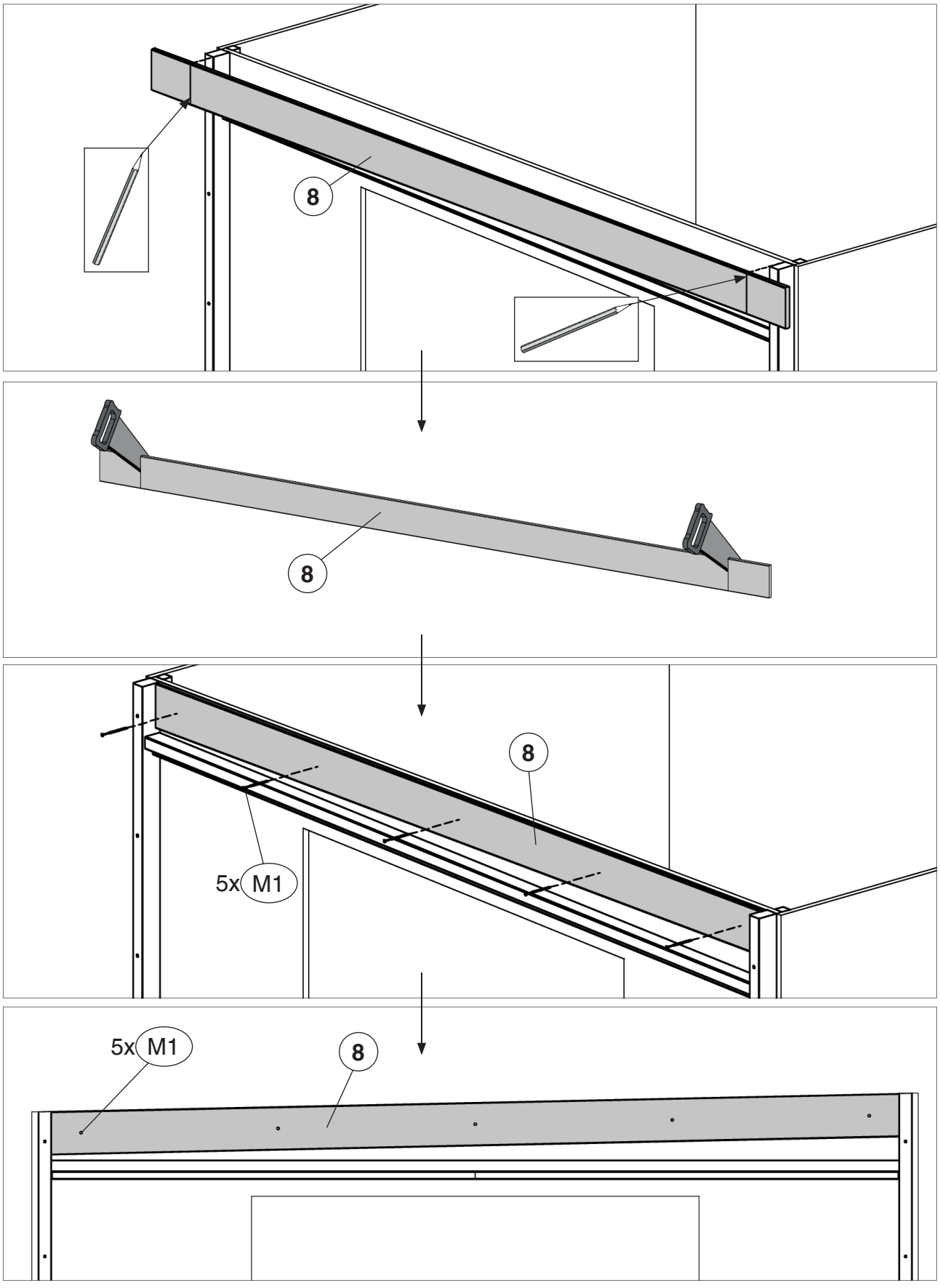

© Copyright HRB 3662

6

M7	M8 x 110	M9	8,4
		M10	M8

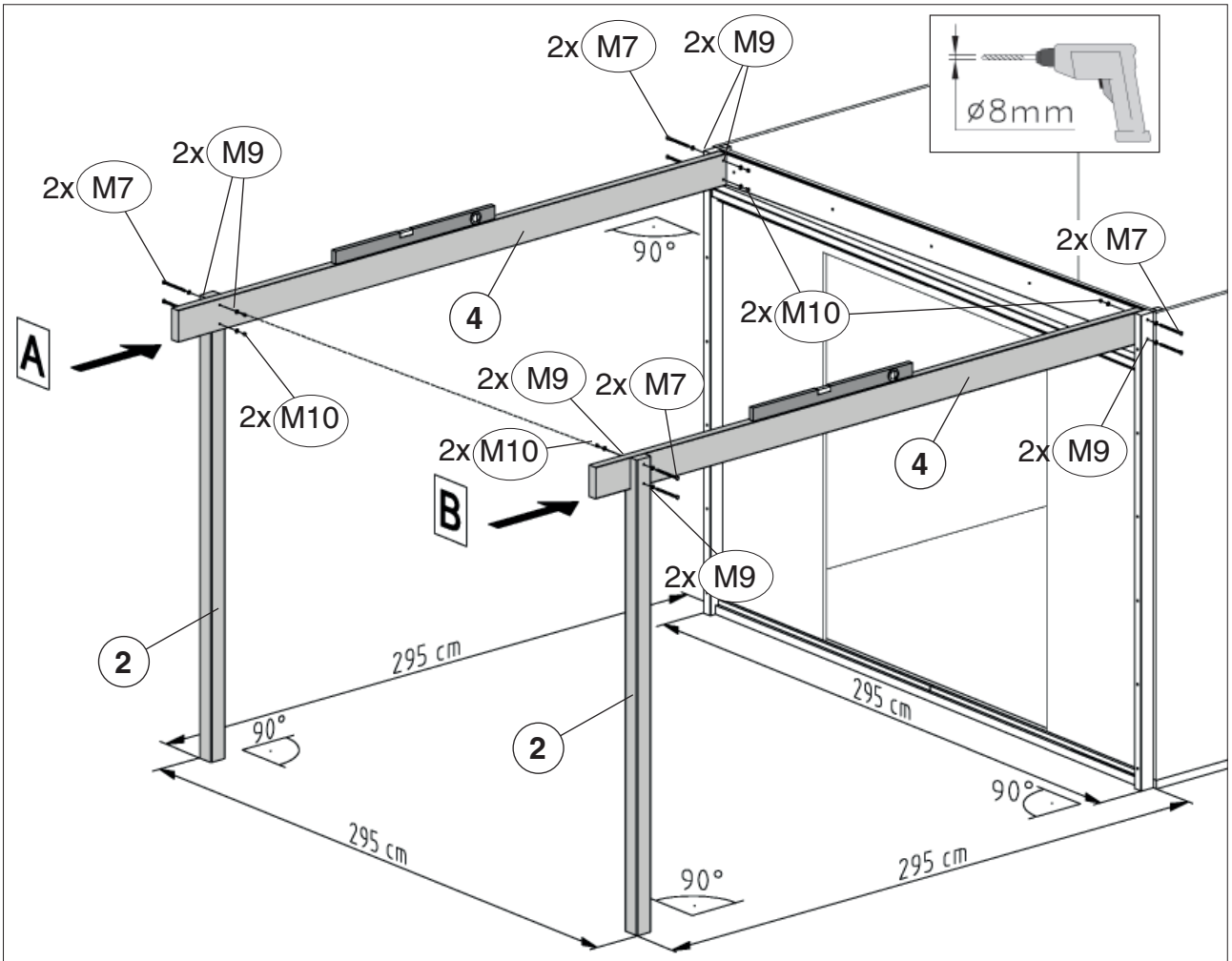

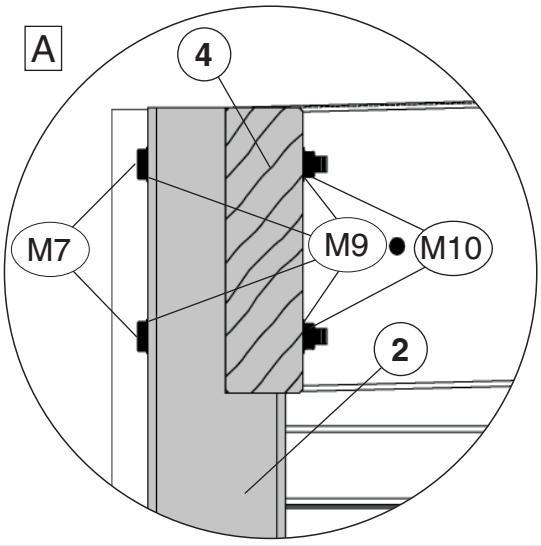

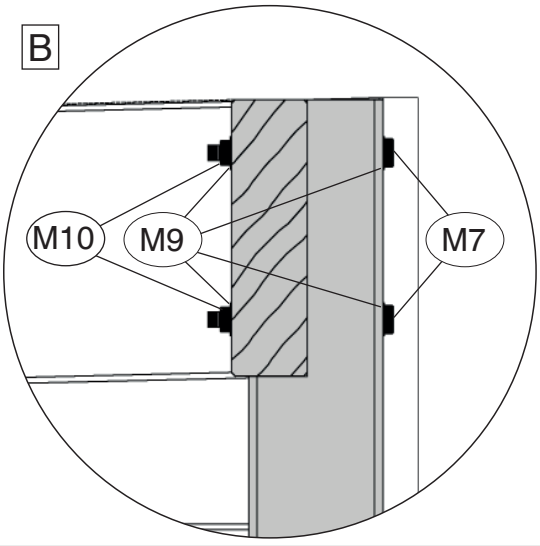

© Copyright HRB 3662

7

M2	5,0 x 80	M8	M8 x 180	M9	8,4
M4	5,0 x 120			M10	M8

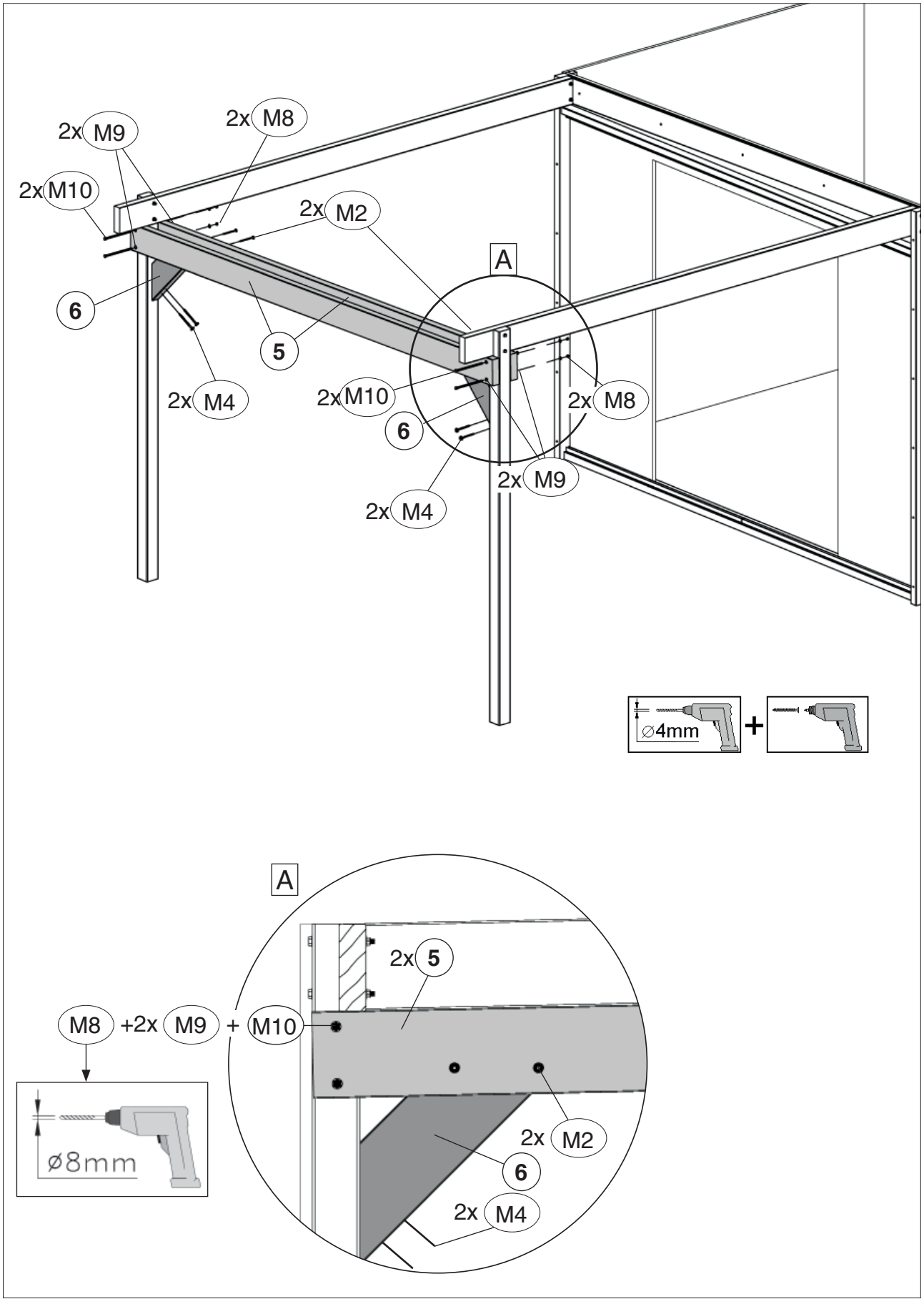

© Copyright HRB 3662

8

	M6	5,0 x 40		M5	5,0 x 20
	M12	50/50/40		M11	50/50/40

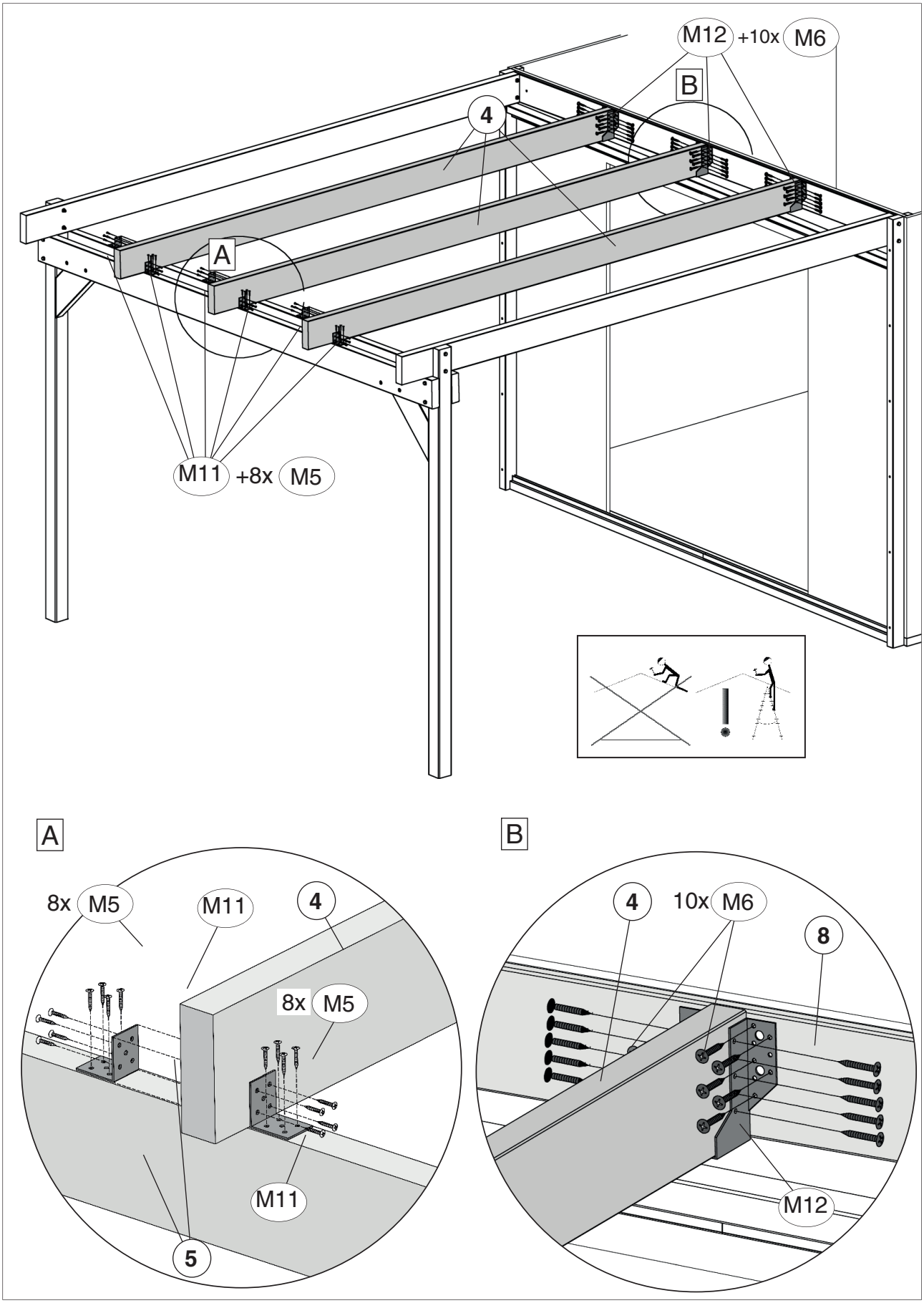

© Copyright HRB 3662

9

M13	2,2 x 55

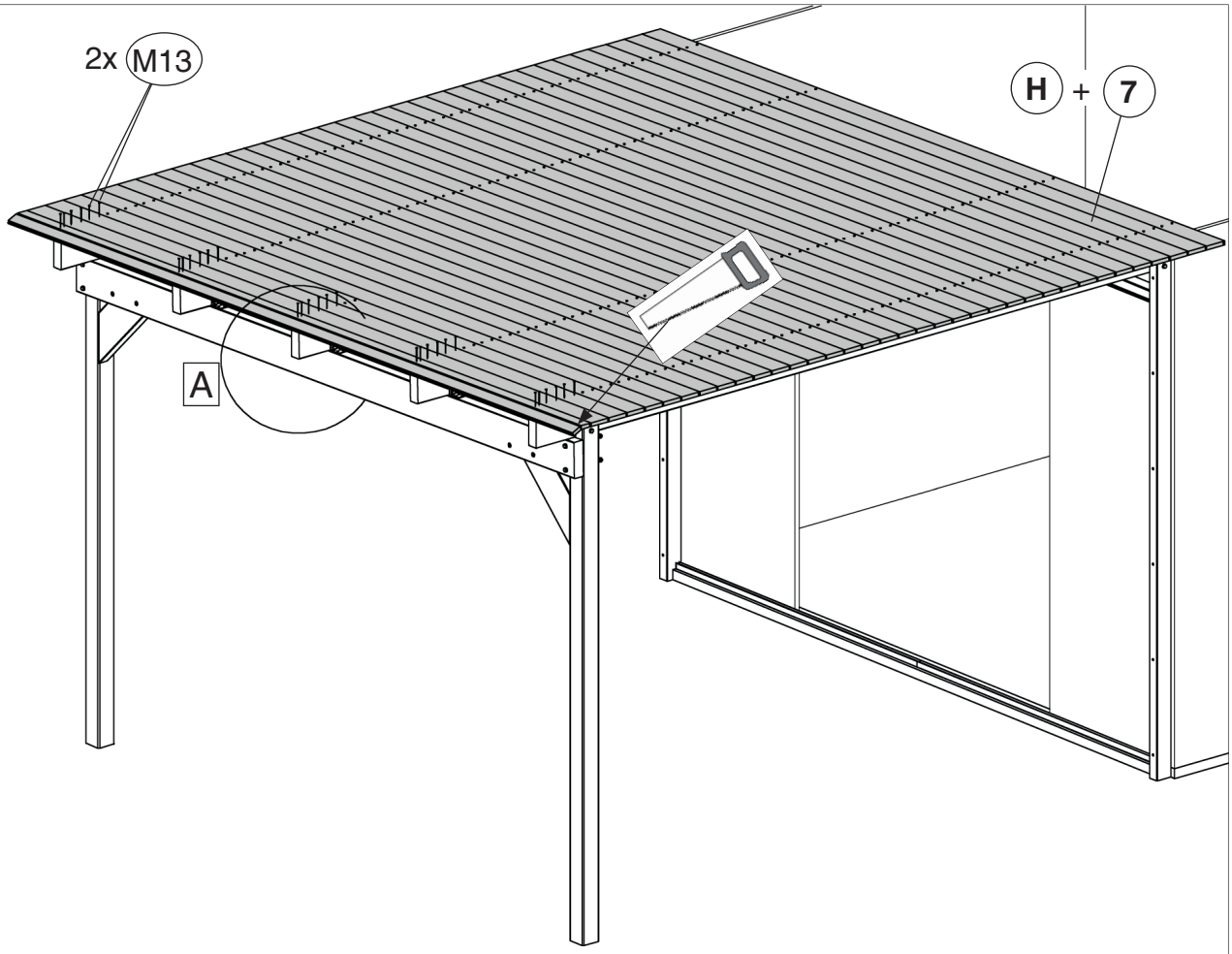

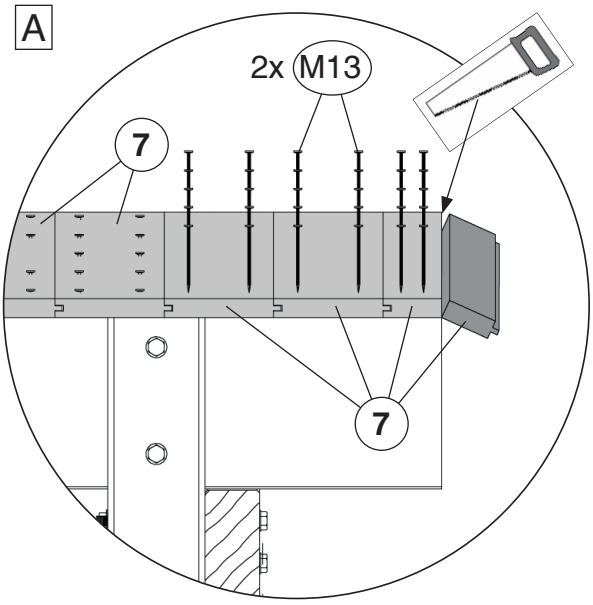

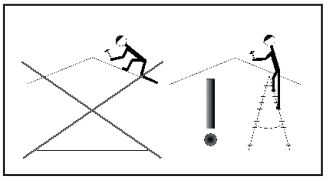

© Copyright HRB 3662

10

	M1	3,5 x 30

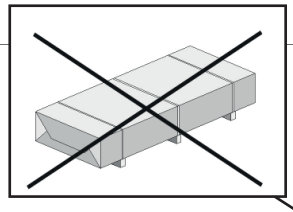

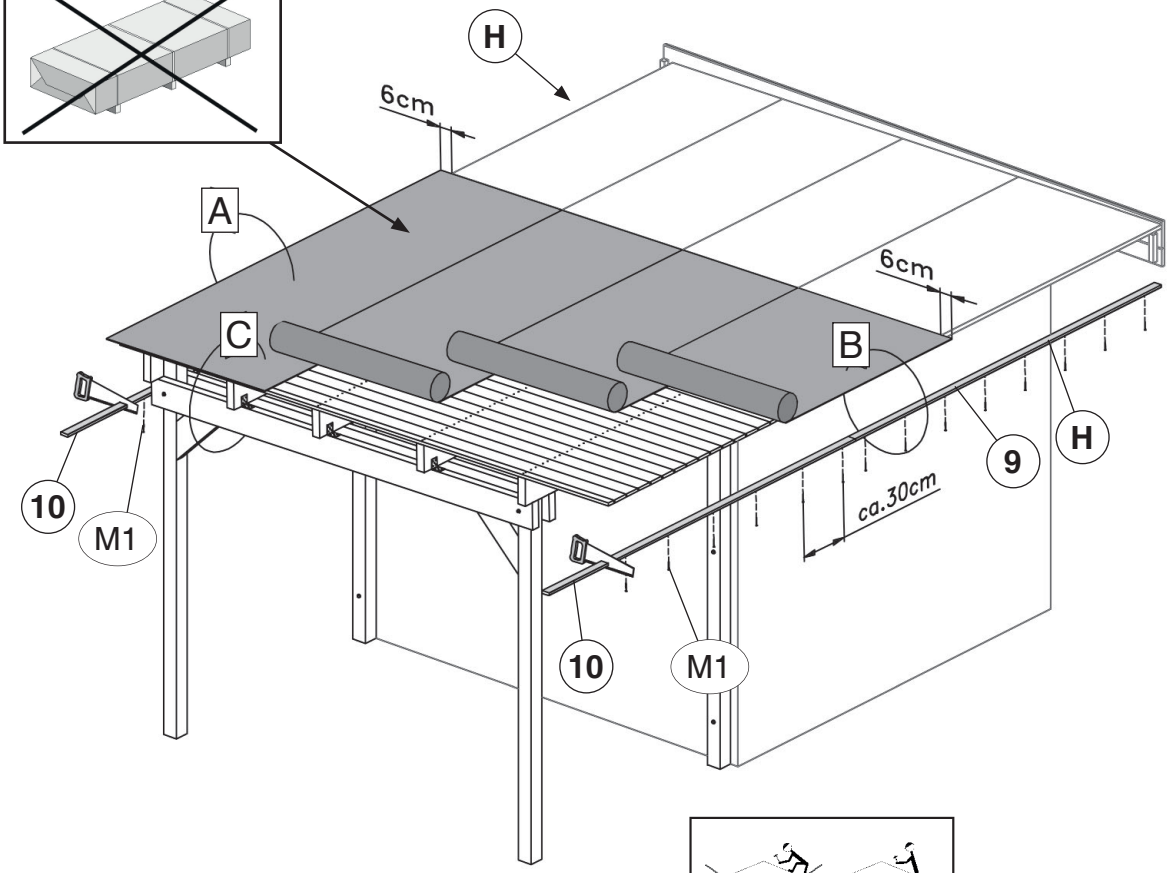

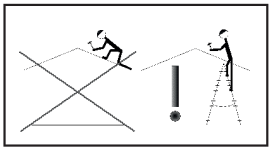

A

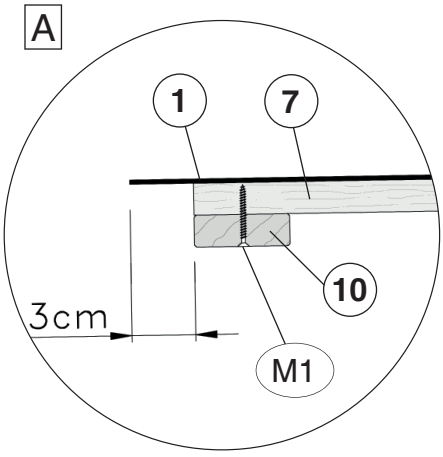

B

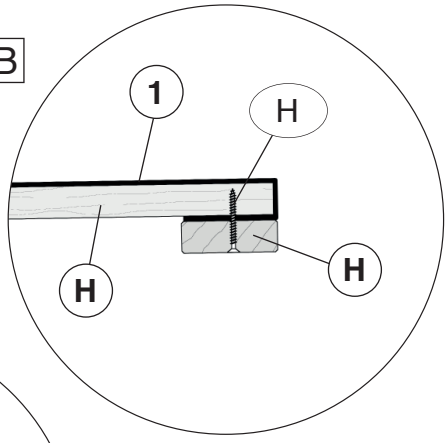

C

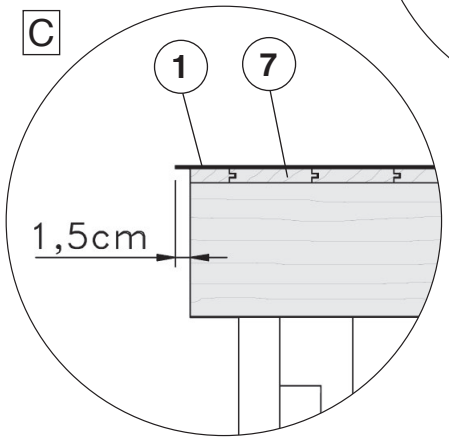

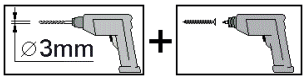

© Copyright HRB 3662

11

M1	3,5 x 30

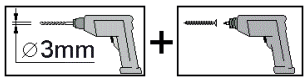

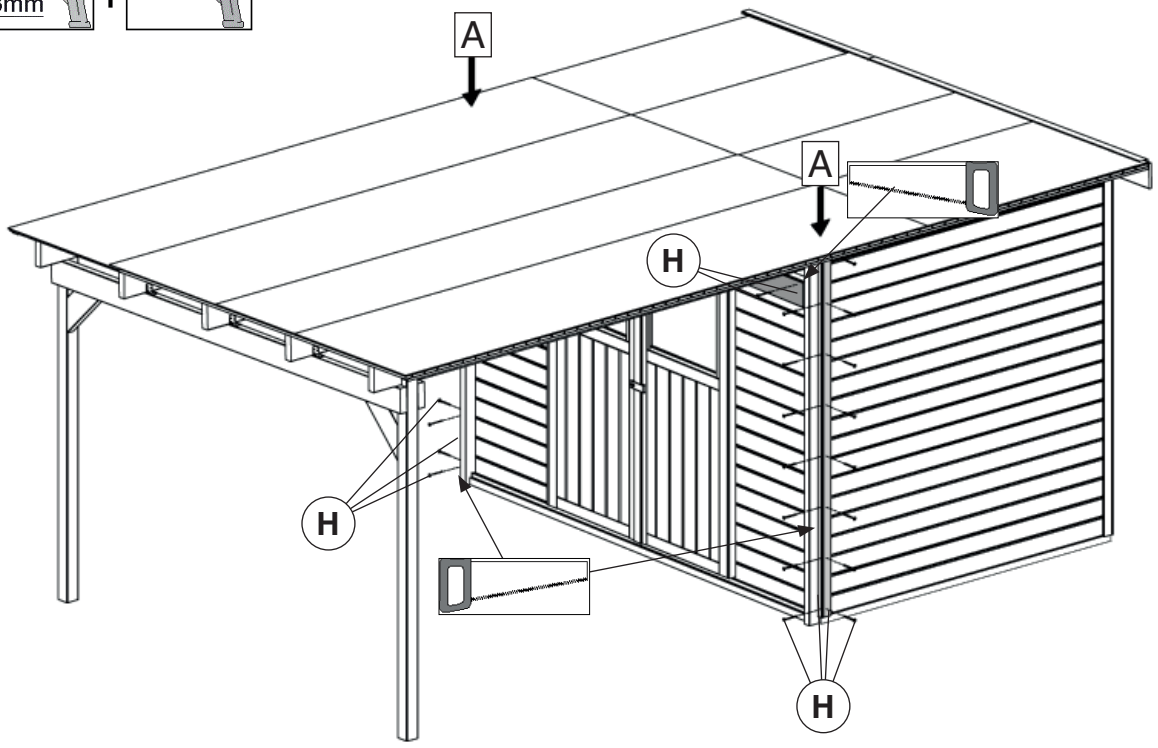

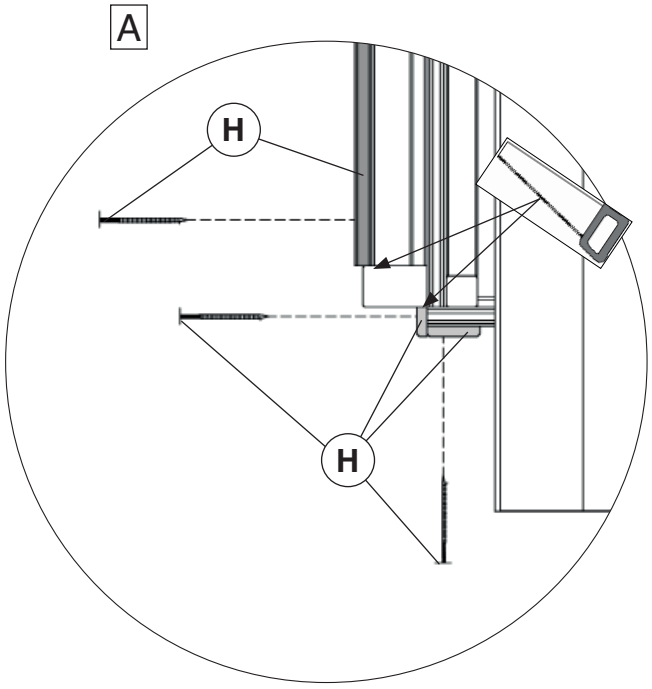

© Copyright HRB 3662

12

M1	3,5 x 30

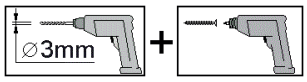

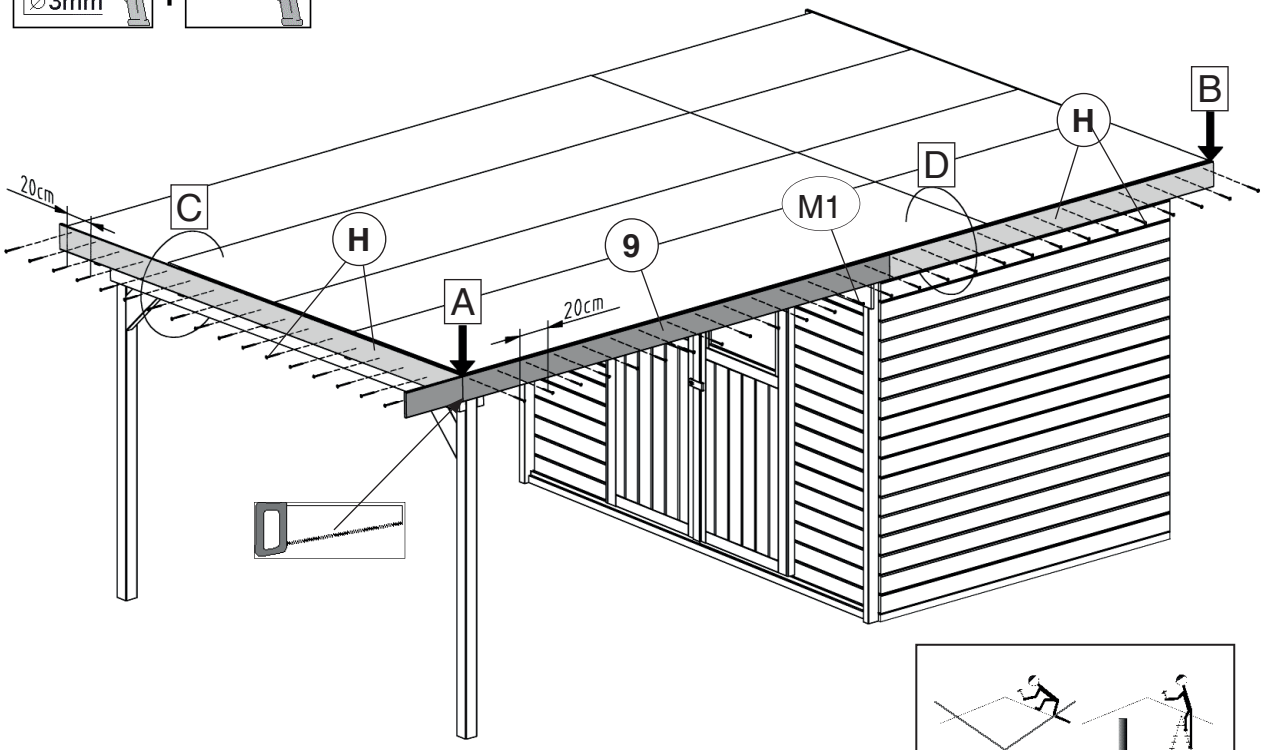

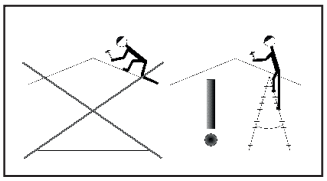

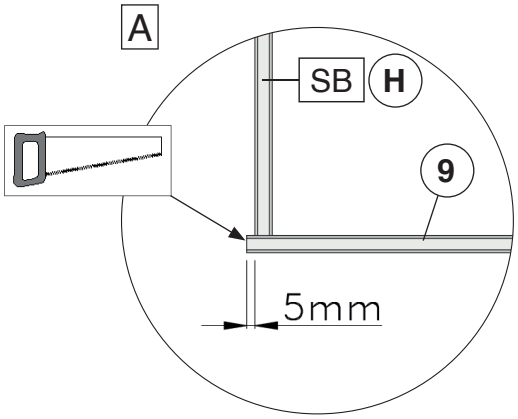

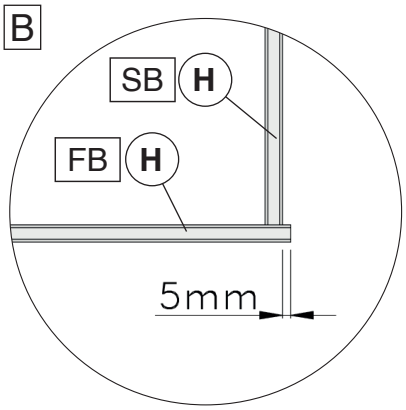

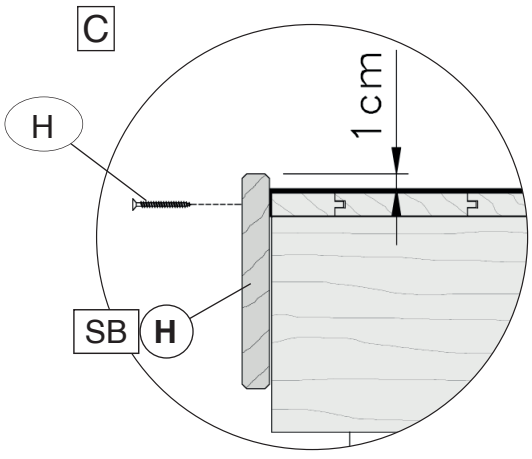

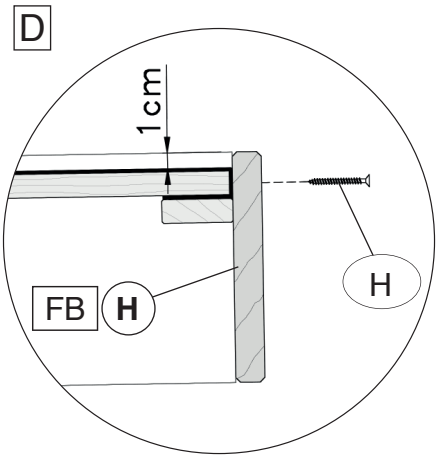

© Copyright HRB 3662

13

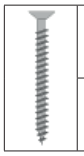	M1 3,5 x 30

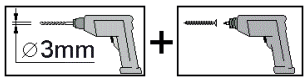

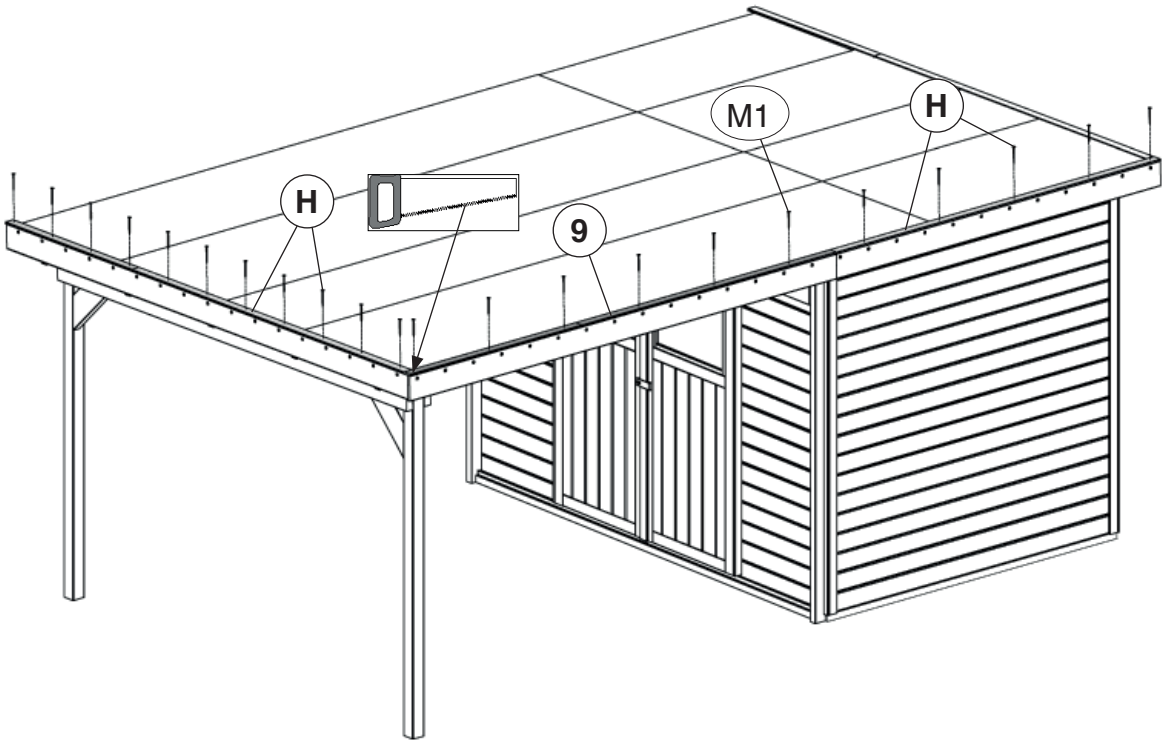

© Copyright HRB 3662

© Copyright HRB 3662

© Copyright HRB 3662

www.weka-holzbau.com

WEKA Holzbau GmbH
Johannesstr. 16, 17034 Neubrandenburg
Tel.: +49 (0)395 42908-0
Fax: +49 (0)395 42908-83
Mail: info@weka-holzbau.com
Web: www.weka-holzbau.com

MA Art.-Nr.: 800.0286.17.68