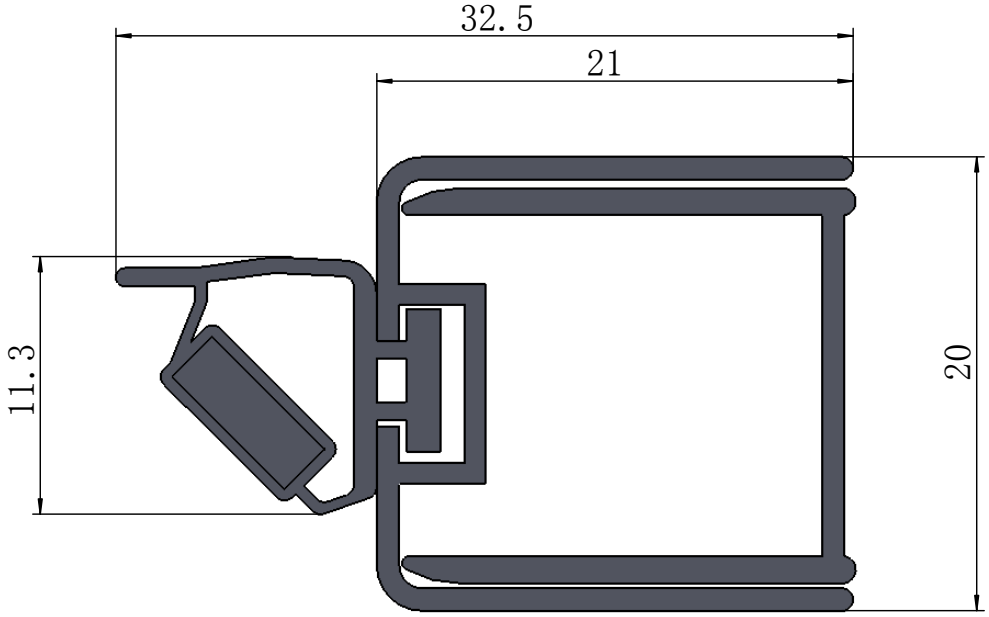
32.5
21
11.3
20

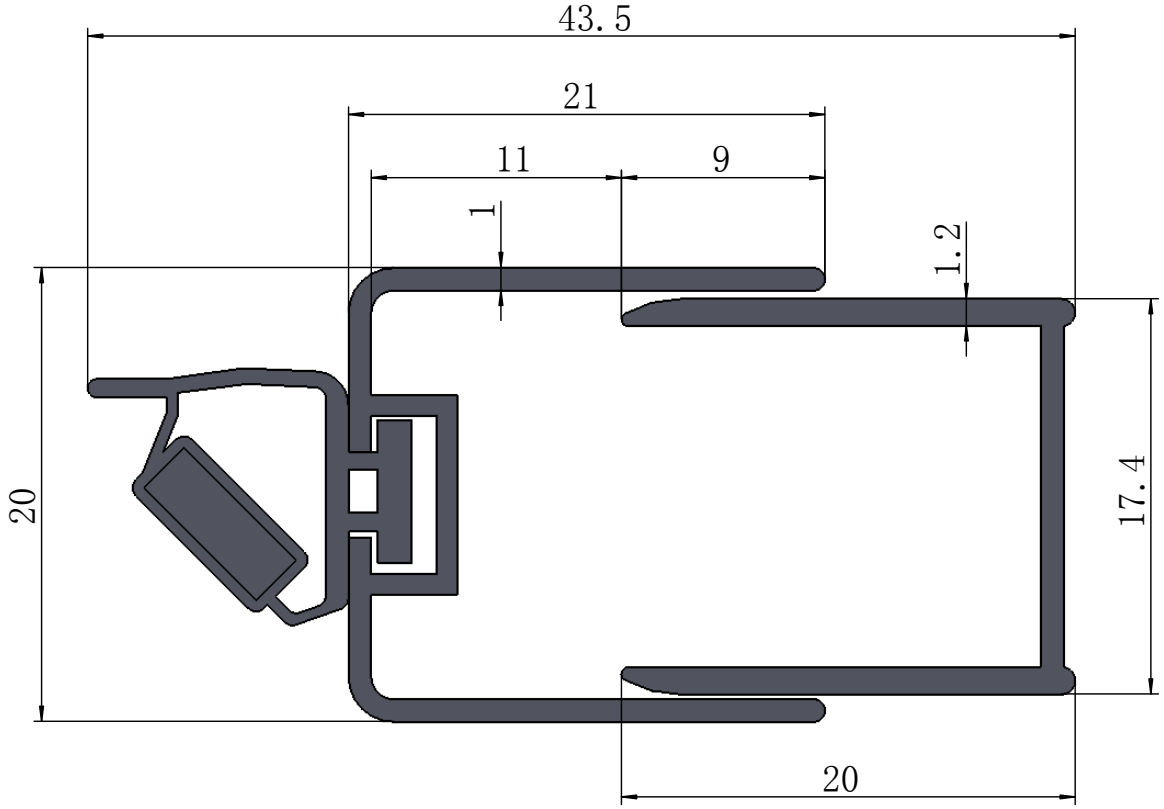
43.5
21
11
9
1
1.2
20
17.4
20