DESIGN + ENGINEERING
GROHE GERMANY

99.1475.031/ÄM 246827/09.19

www.grohe.com

Pure Freude an Wasser
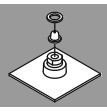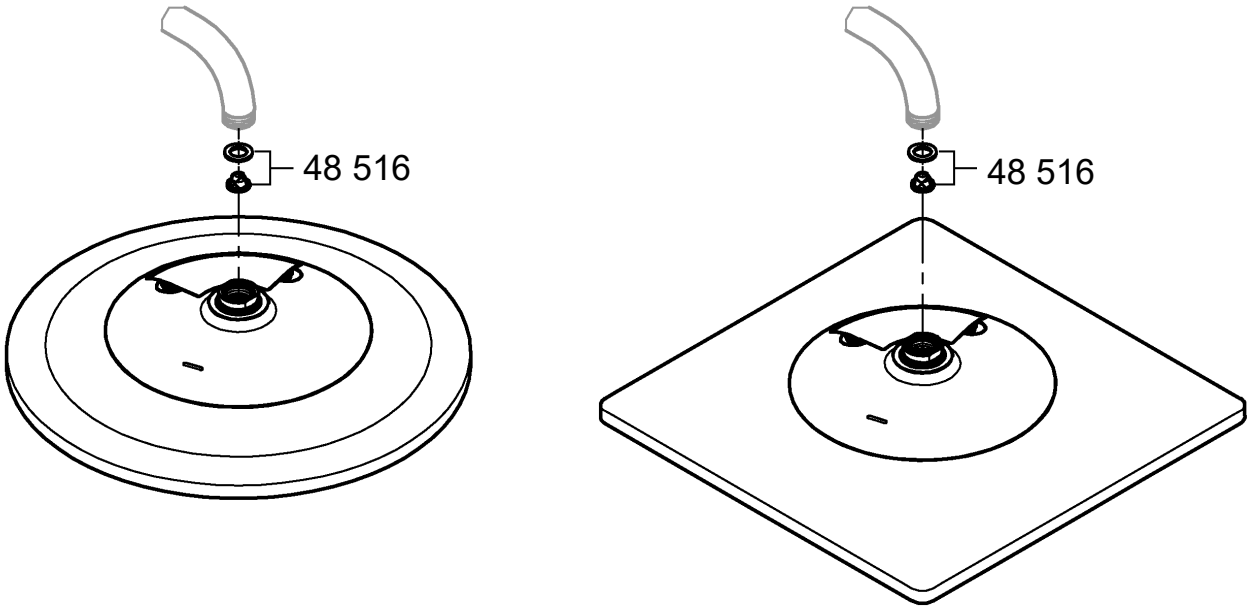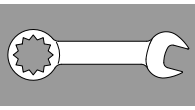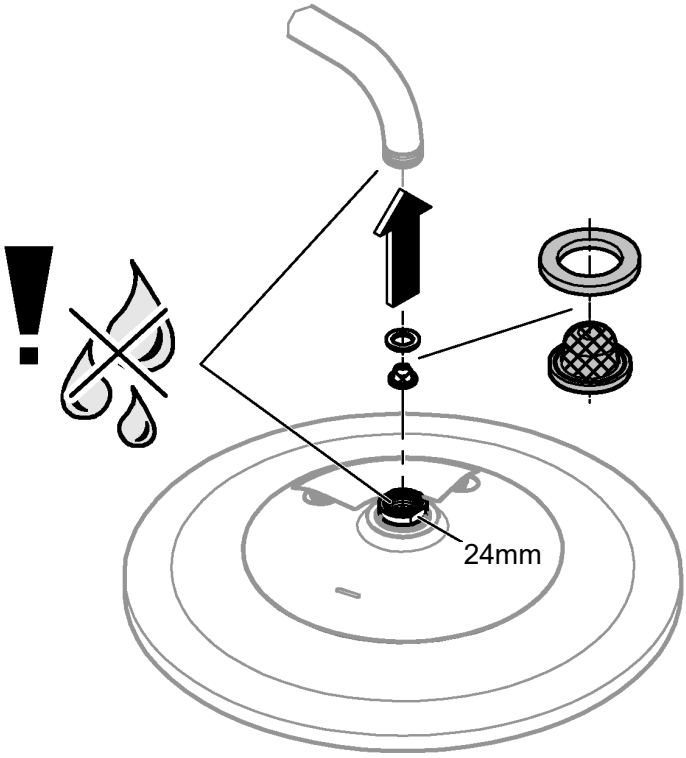
GROHE