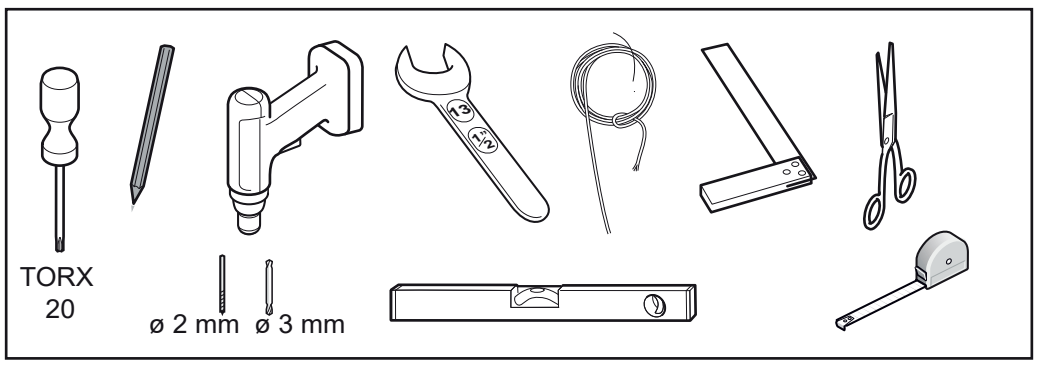

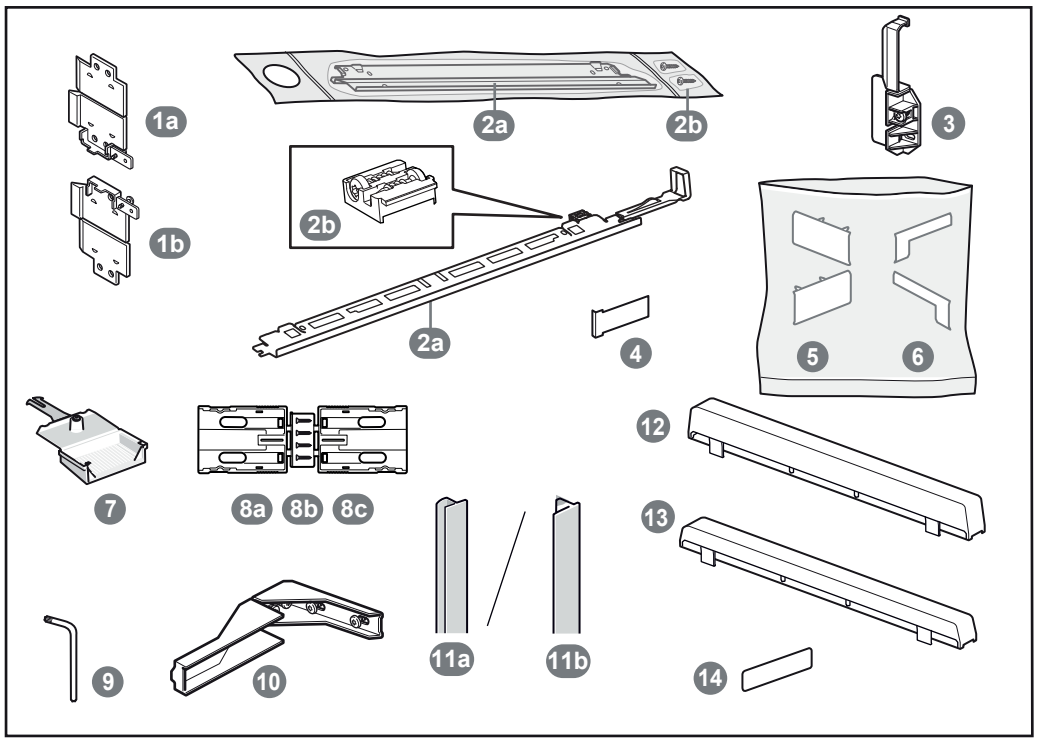

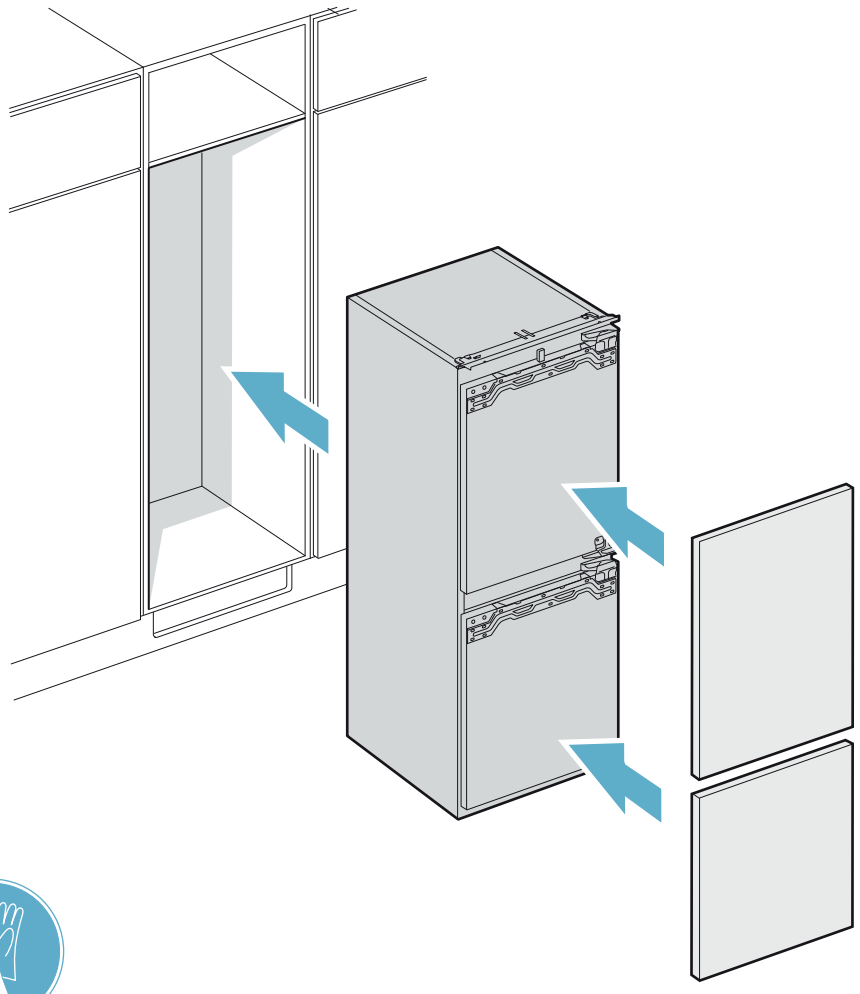

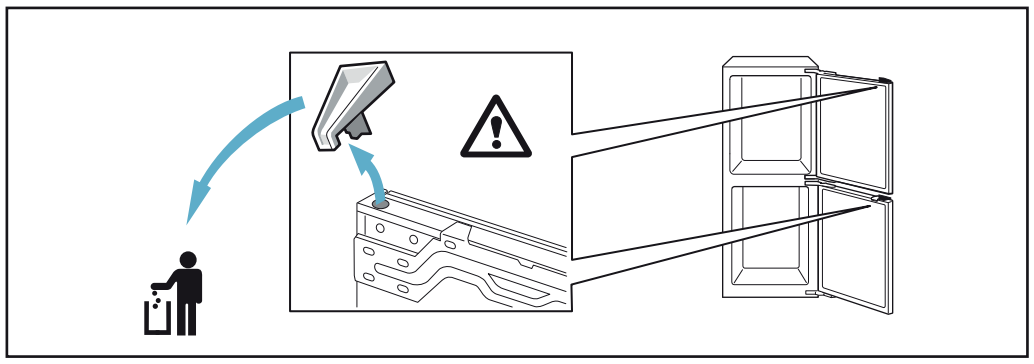

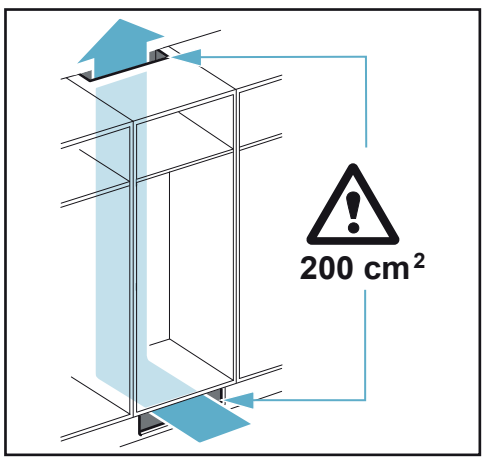

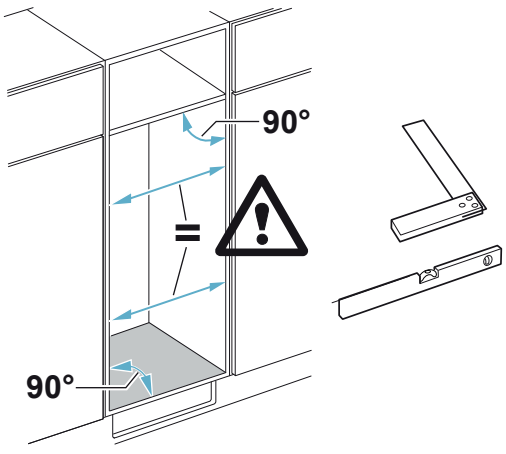

8001221617 (0105)

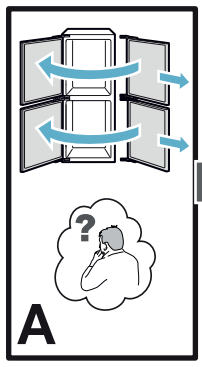

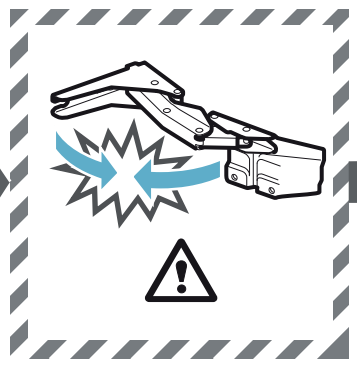

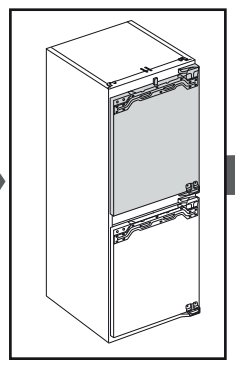

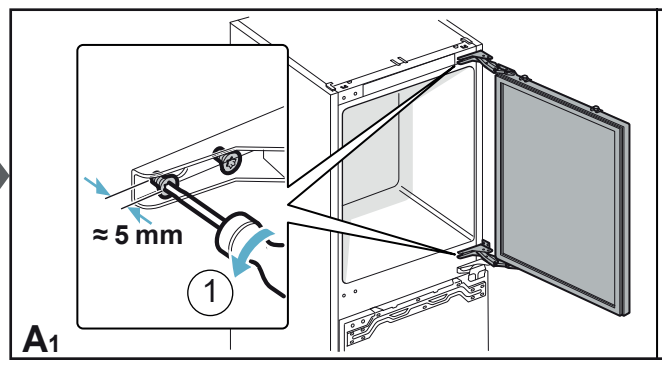

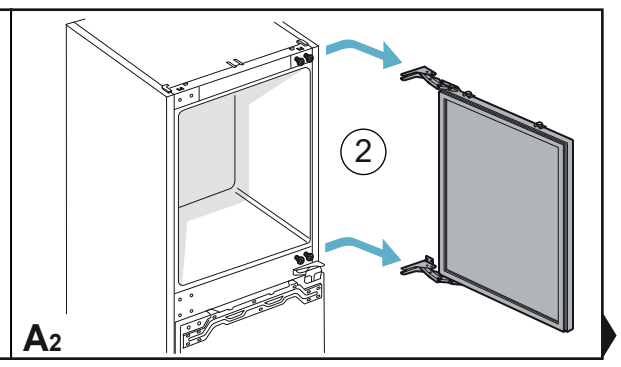

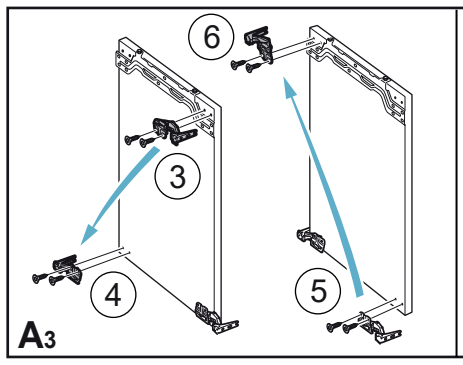

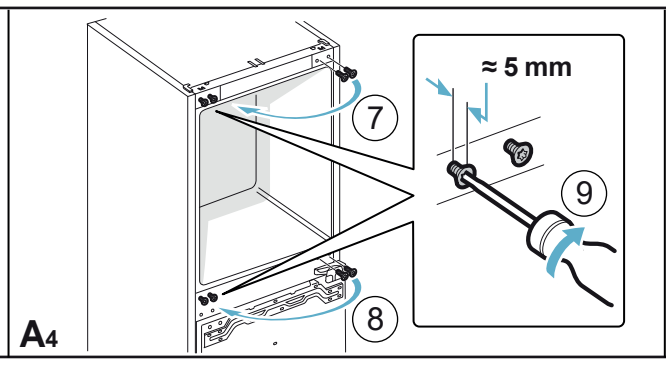

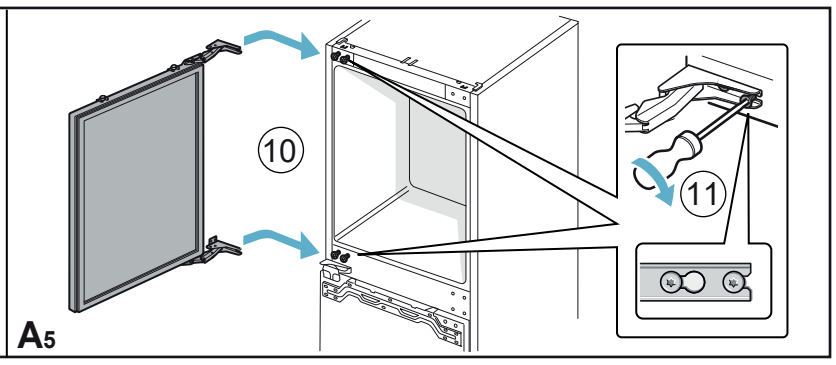

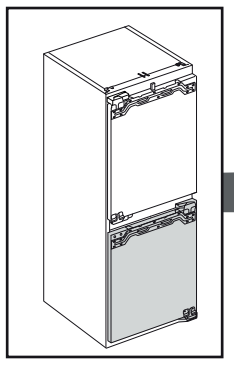

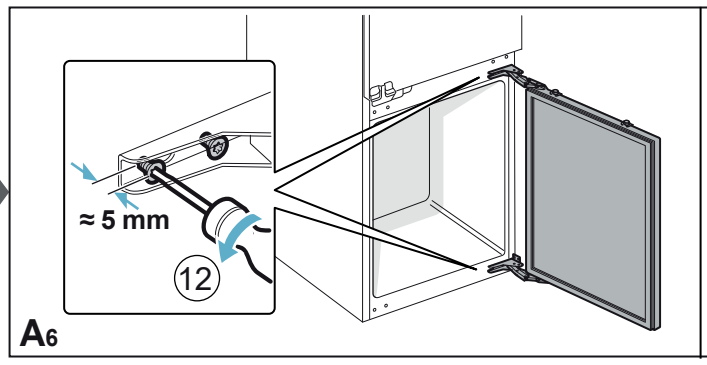

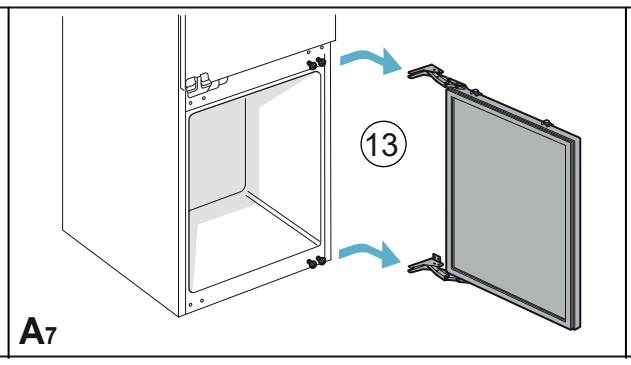

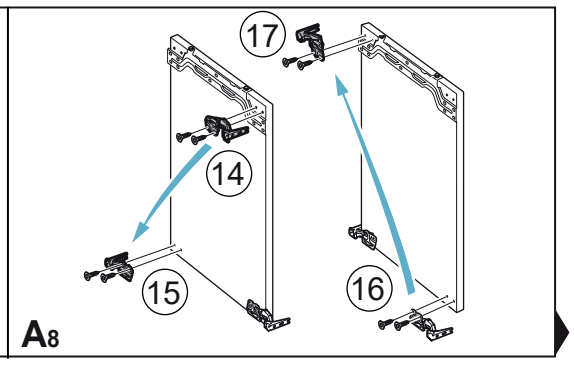

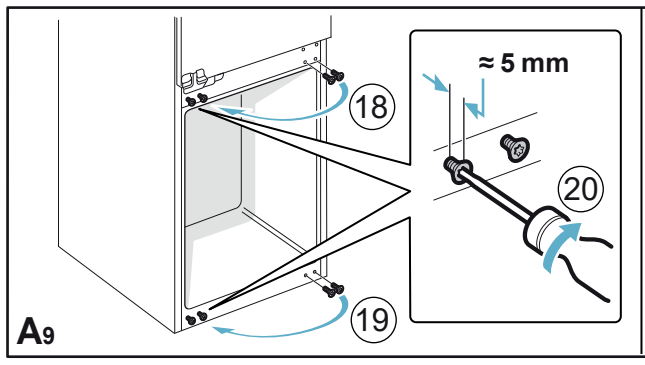

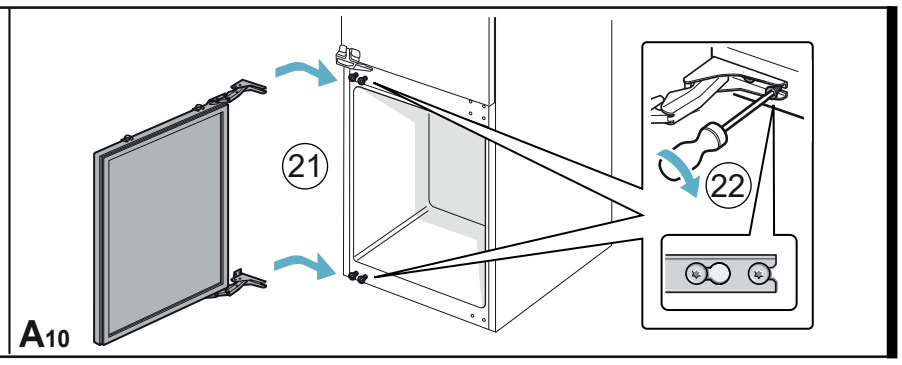

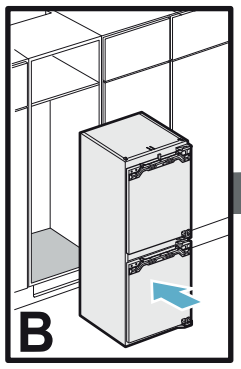
B

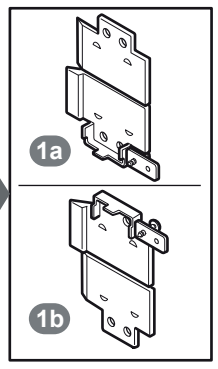
1a
1b

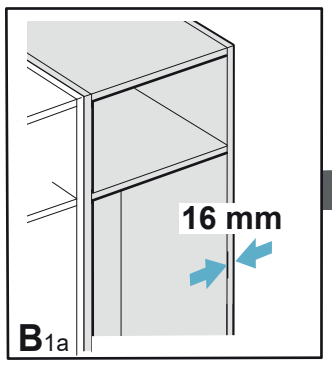
16 mm
B1a

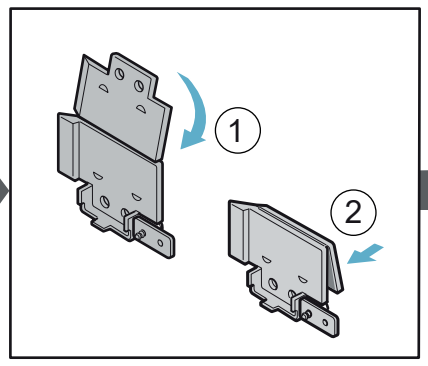
1
2

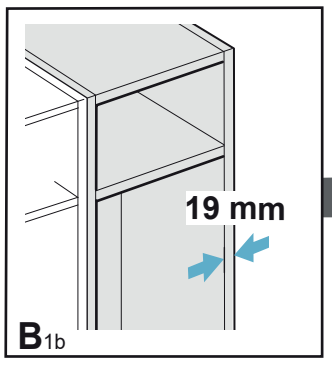
19 mm
B1b

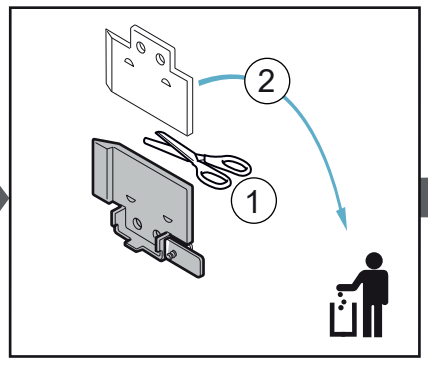
2
1

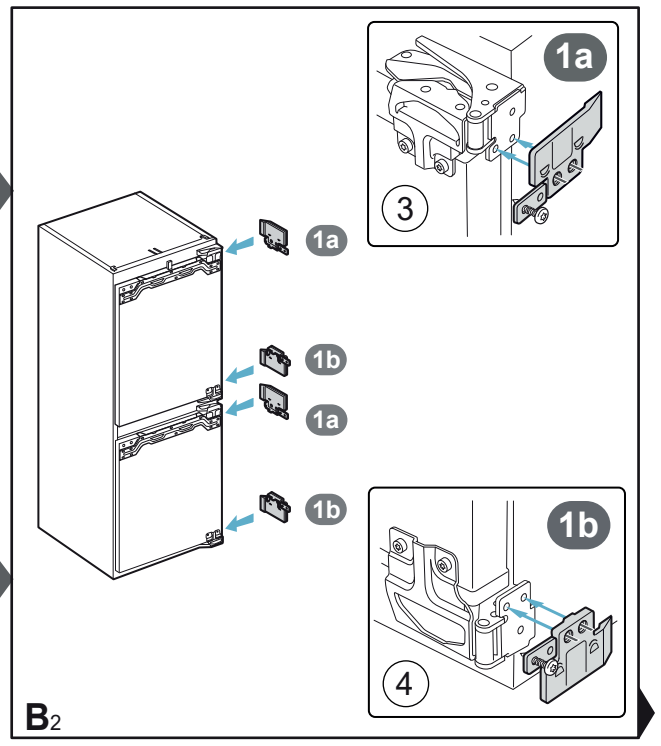
1a
1b
1a
1b
1a
3
1b
4
B2

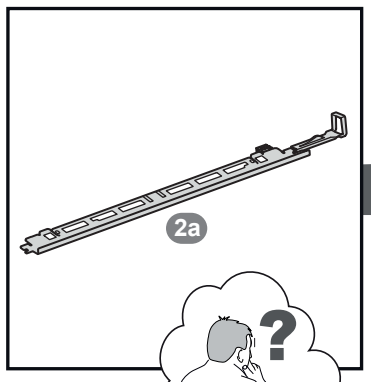
2a

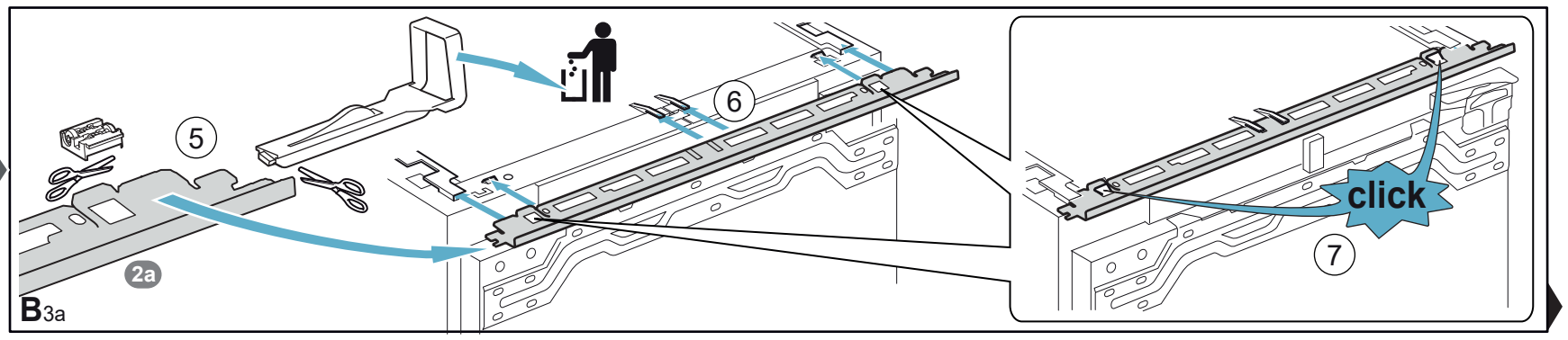
5
6
click
7
2a
B3a

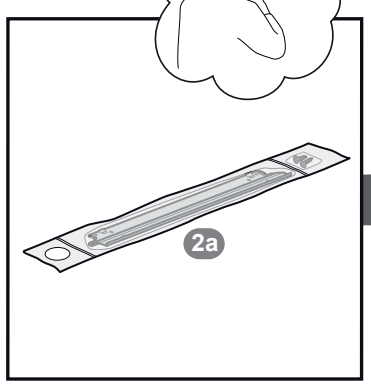
2a

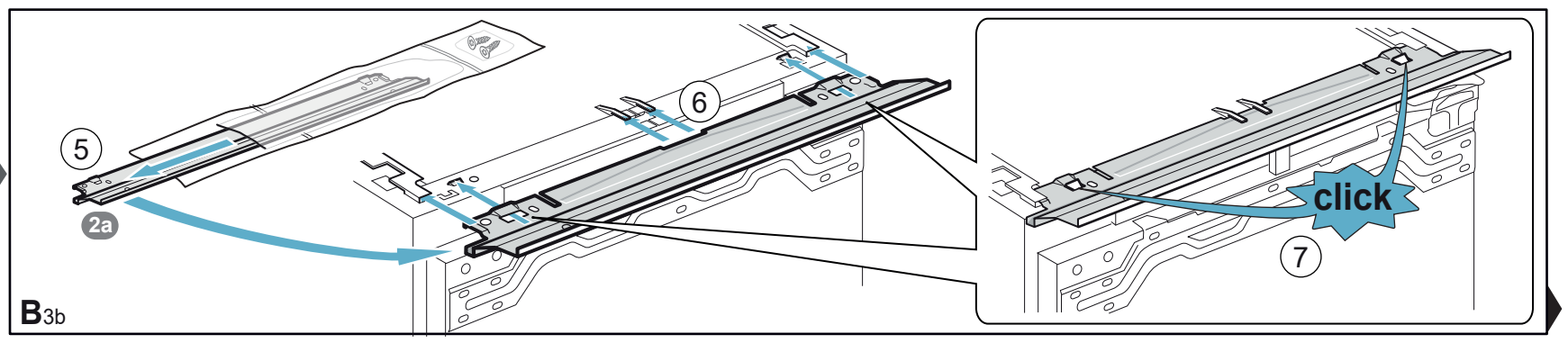
5
6
click
7
2a
B3b

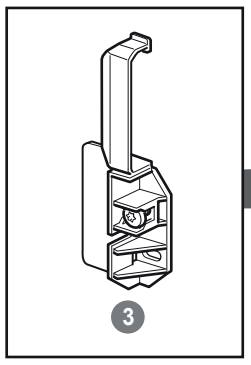
3

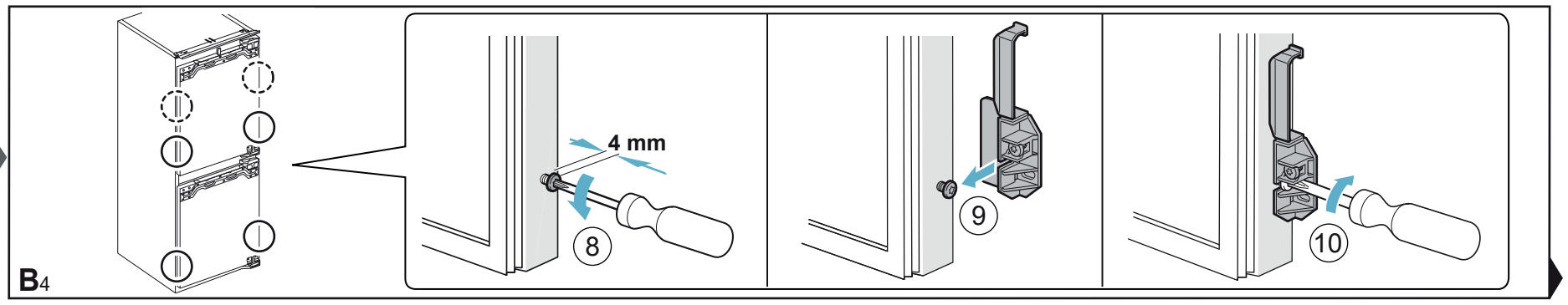
4 mm
8
9
10
B4

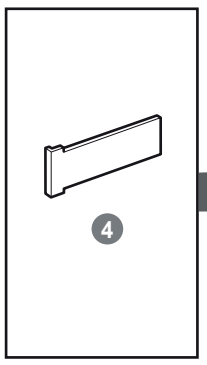
4

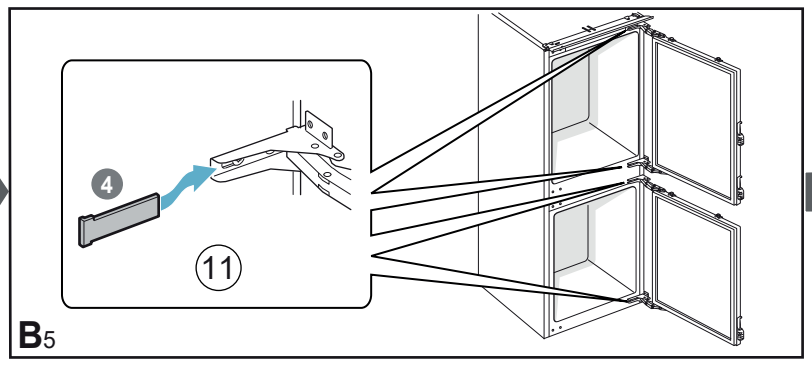
4
11
B5

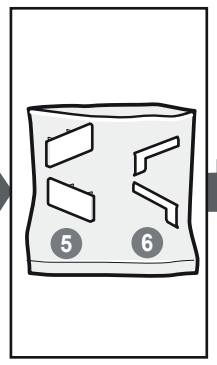
5
6

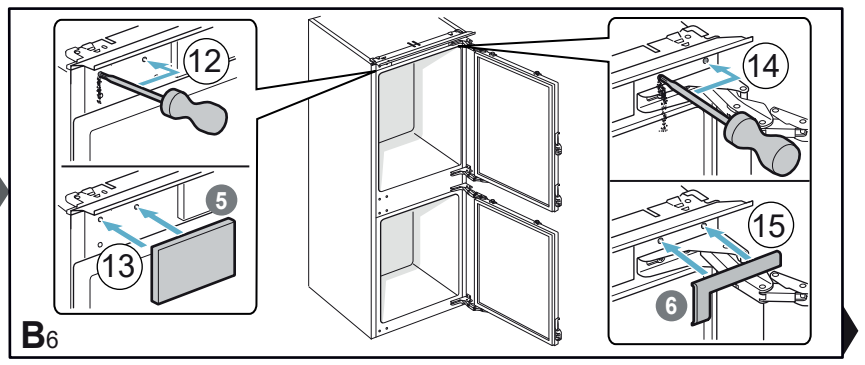
12
13
5
14
15
6
B6

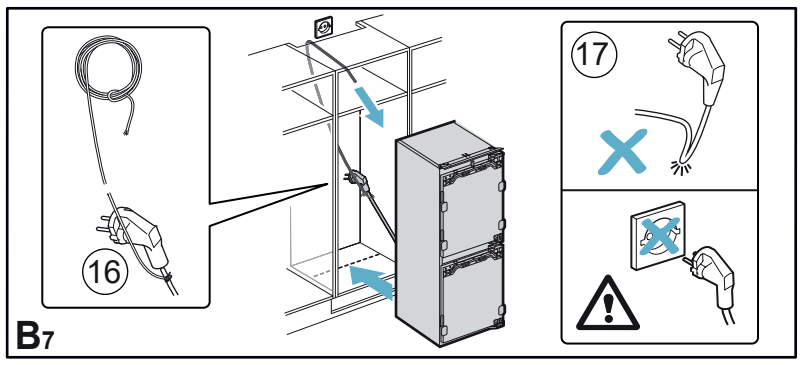
16
17
B7

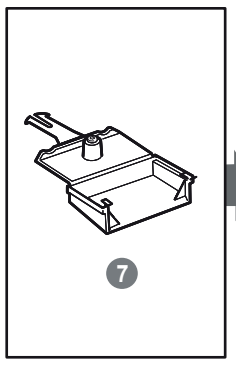
7

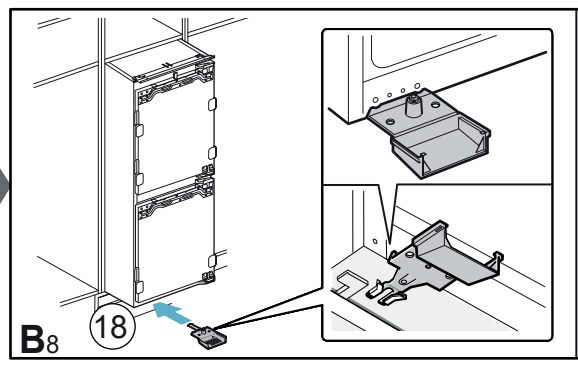
18
B8

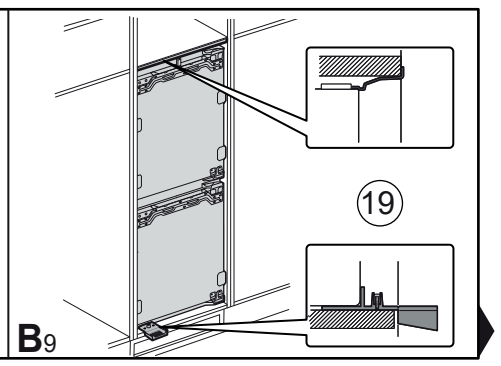
19
B9

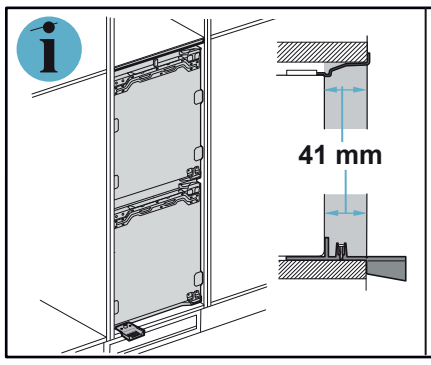
41 mm

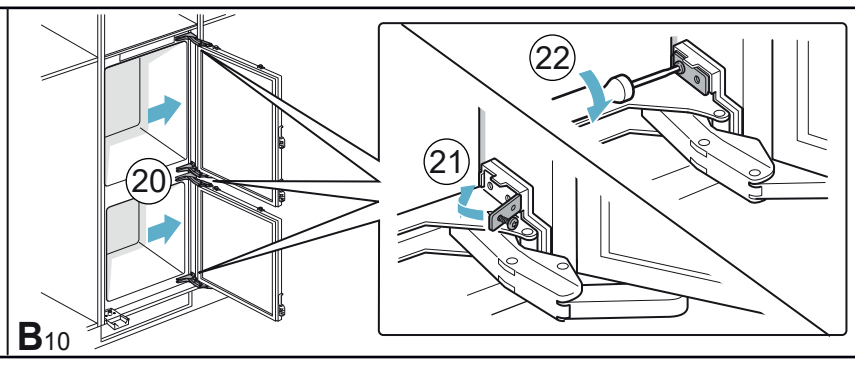
20
21
22
B10

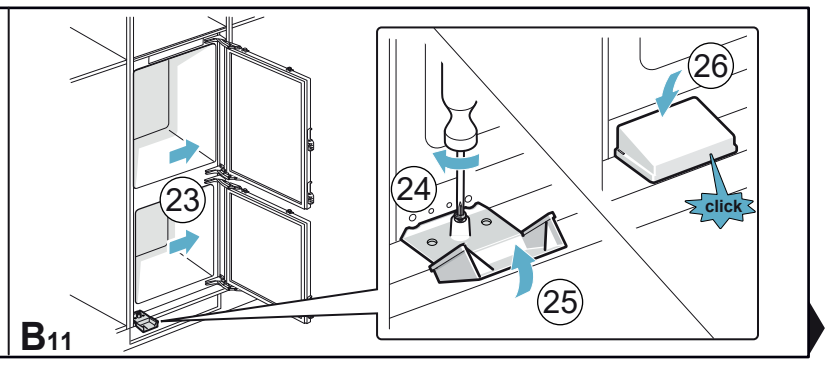
23
24
25
26
click
B11

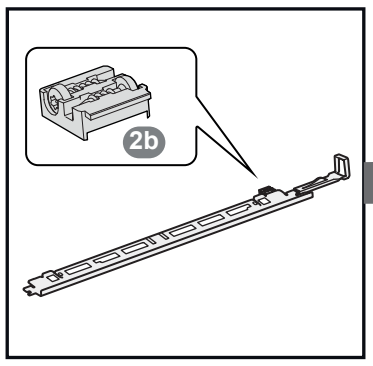
2b

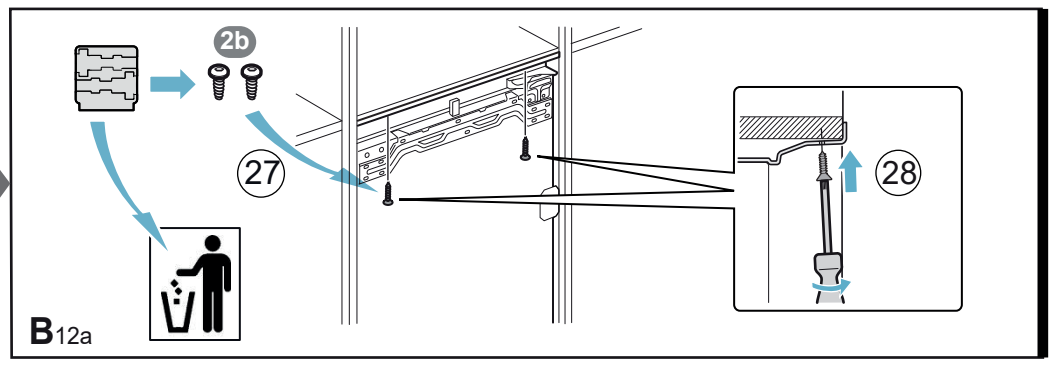
2b
27
28
B12a

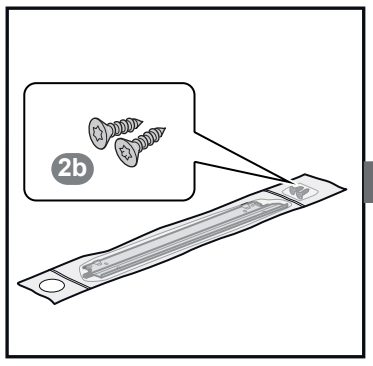
2b

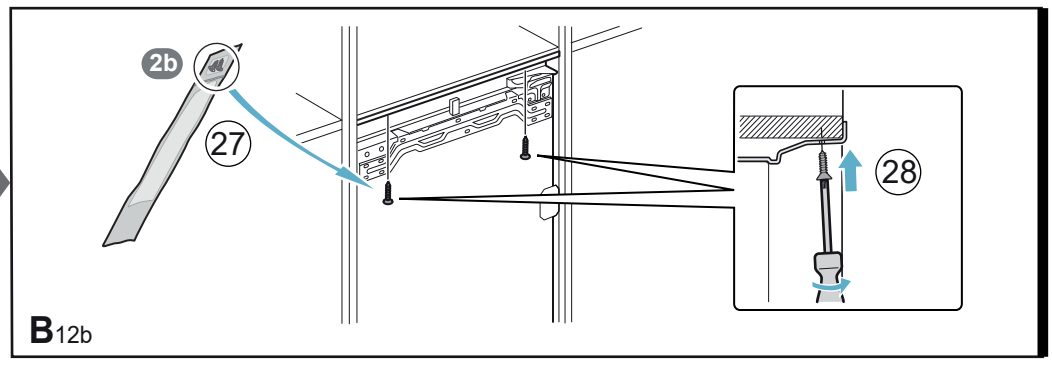
2b
27
28
B12b

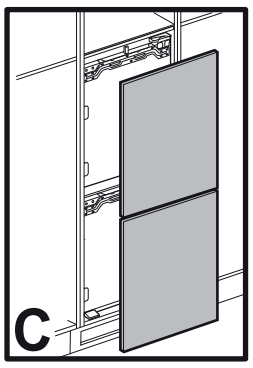
C

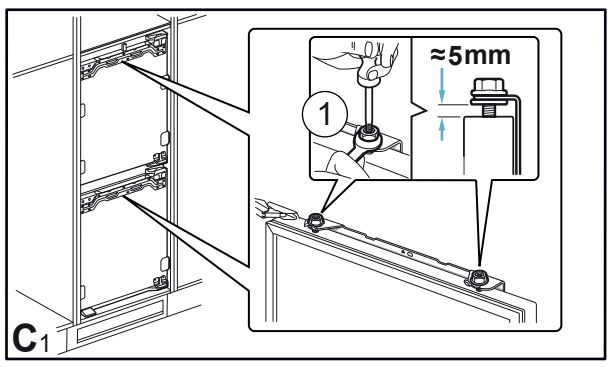
≈5mm
1
C1

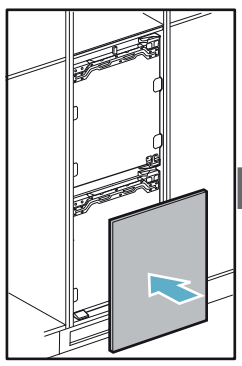

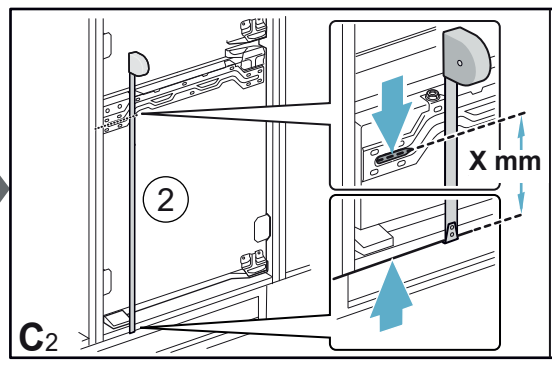
2
X mm
C2

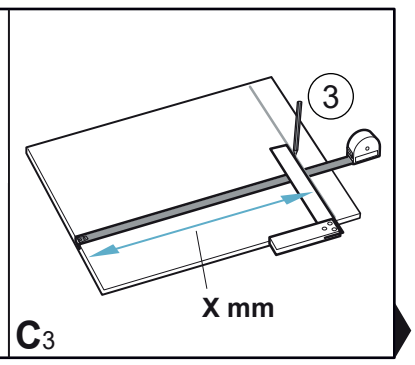
3
X mm
C3

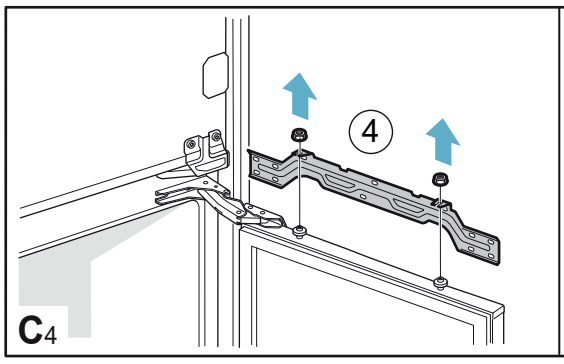
4
C4

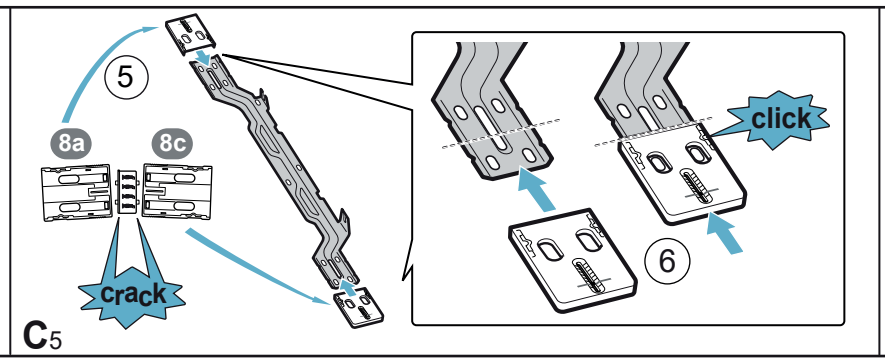
5
8a
8c
crack
click
6
C5

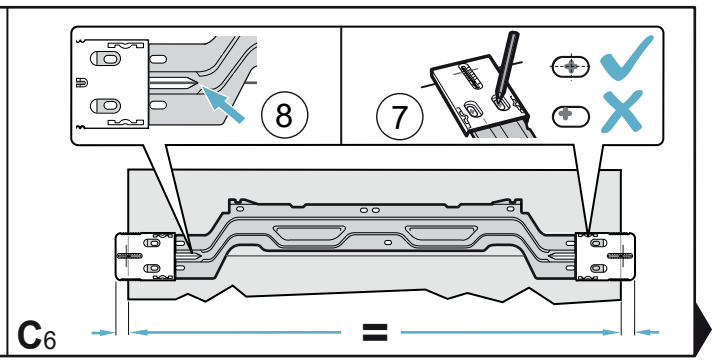
8
7
=
C6

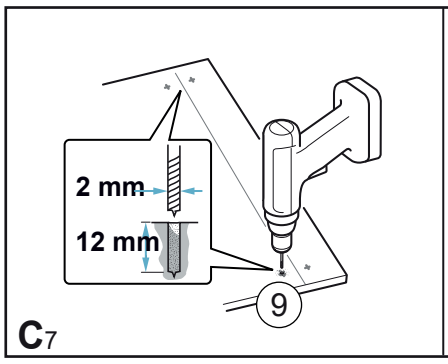
2 mm
12 mm
9
C7

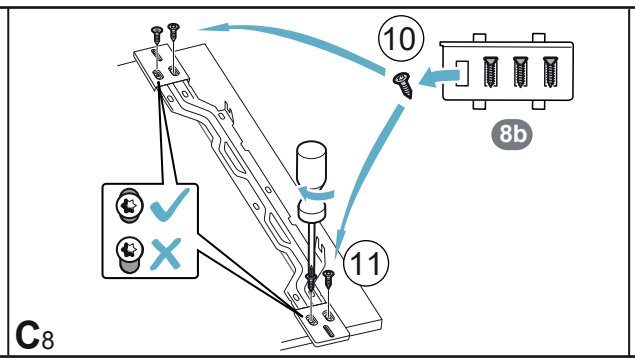
10
8b
11
C8

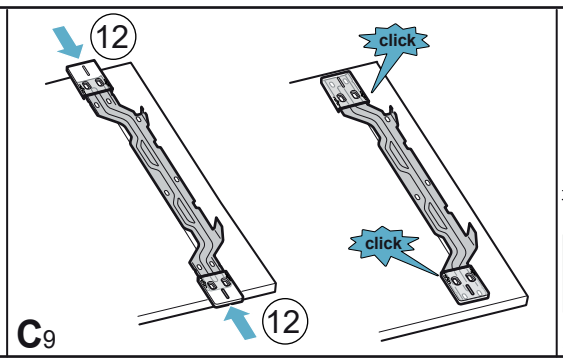
12
click
click
12
C9

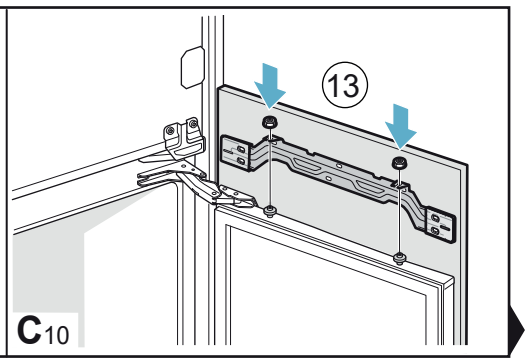
13
C10

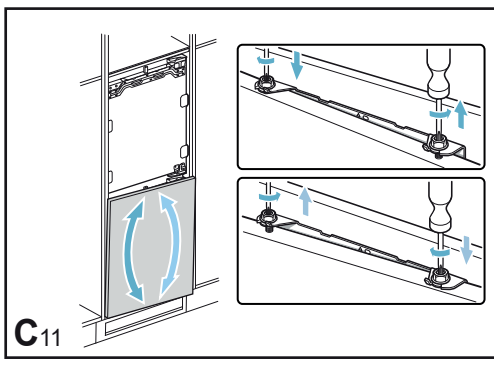
C11

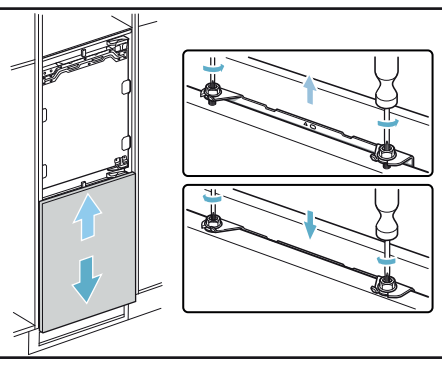

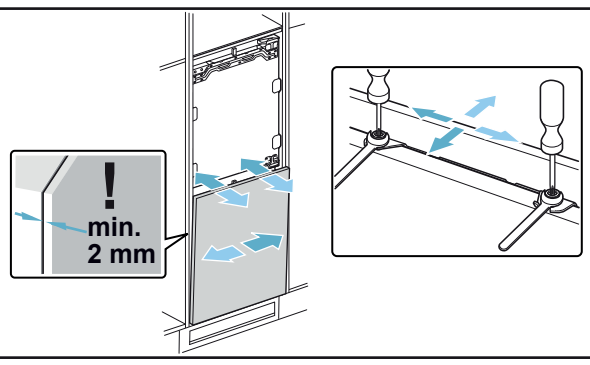
!
min.
2 mm

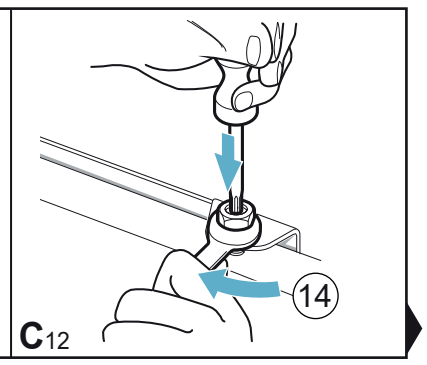
14
C12

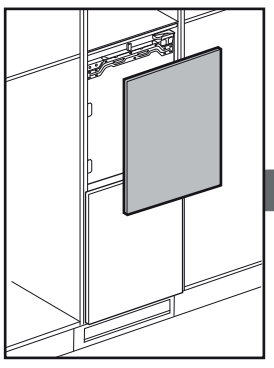

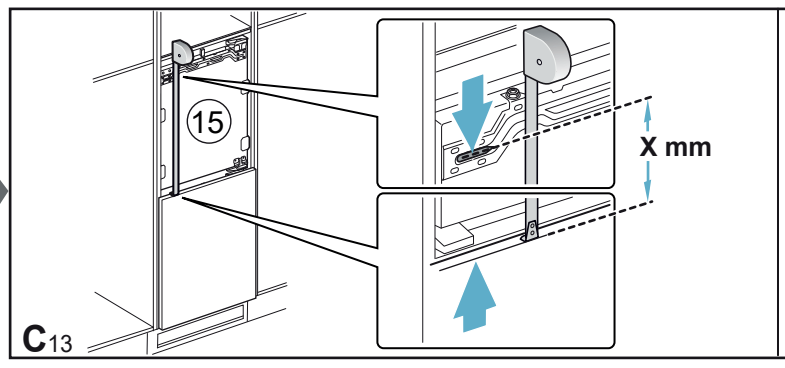
15
X mm
C13

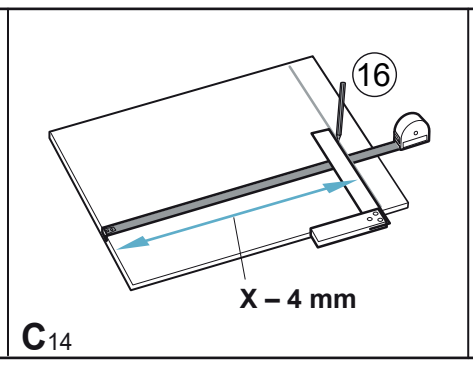
16
X – 4 mm
C14

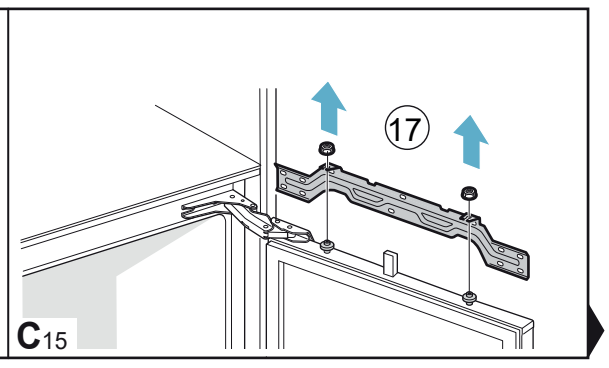
17
C15

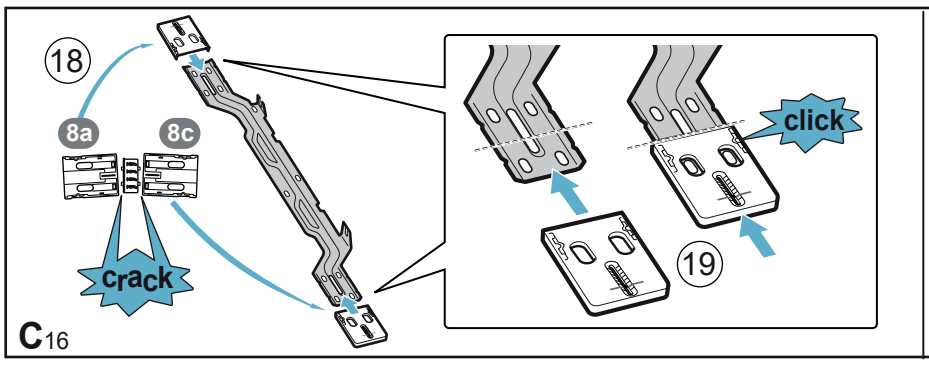
18
8a
8c
crack
click
19
C16

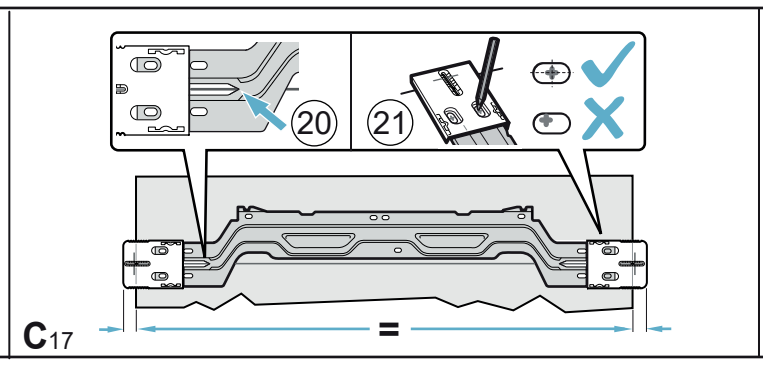
20
21
=
C17

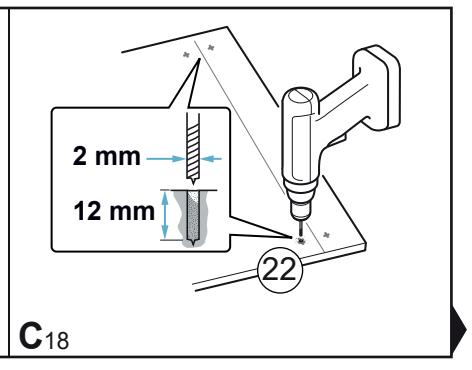
2 mm
12 mm
22
C18

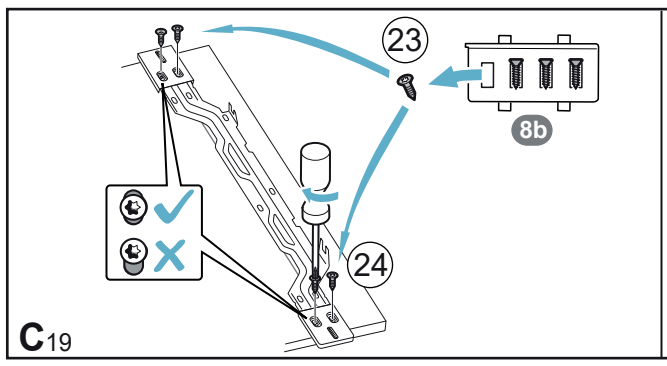

C19

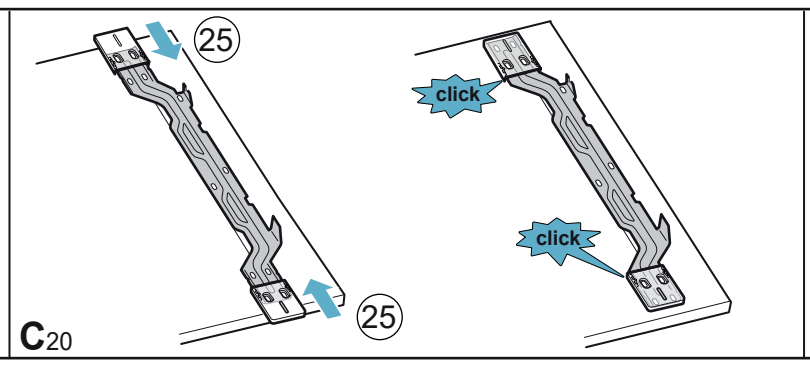

C20

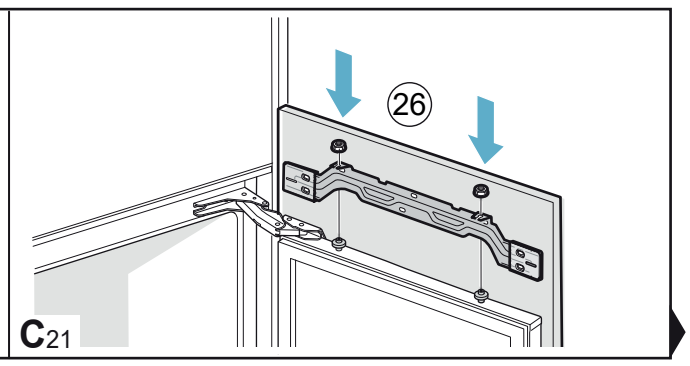

C21

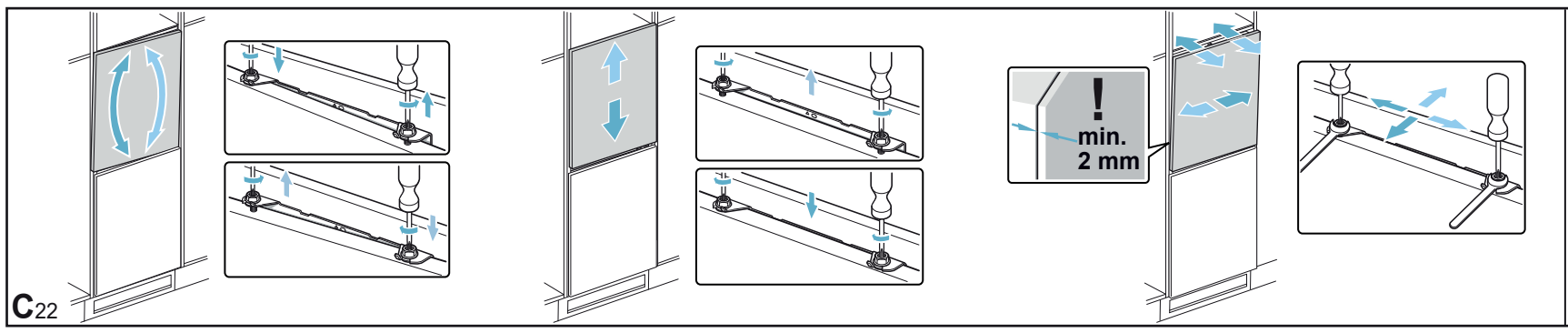

C22

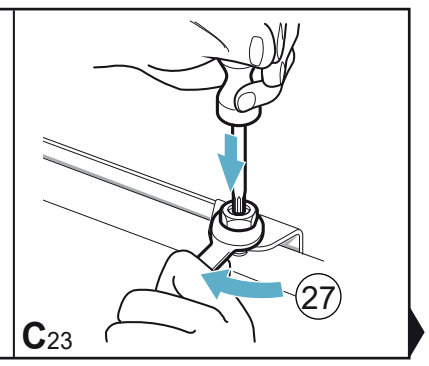

C23

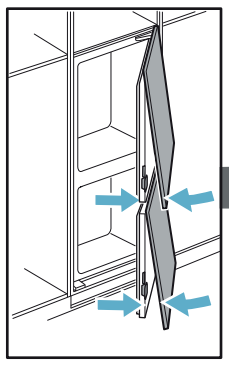

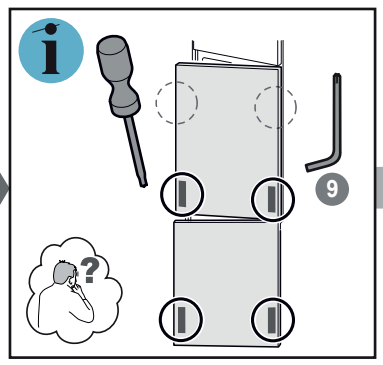

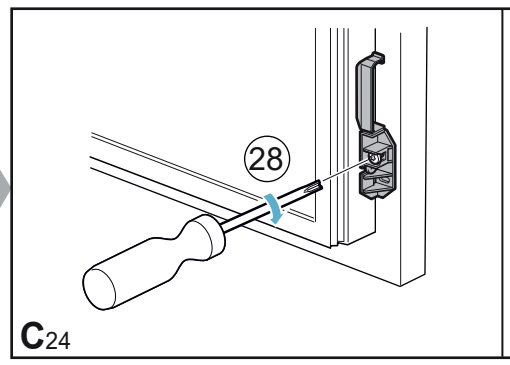

C24

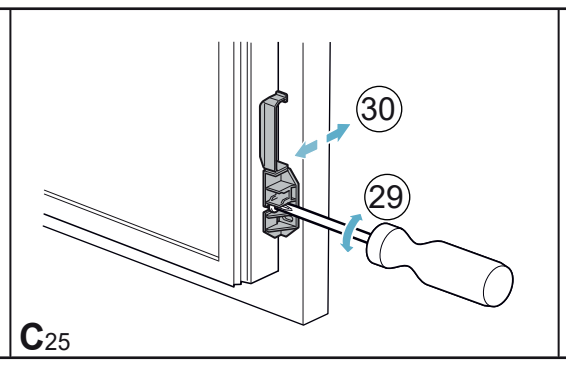

C25

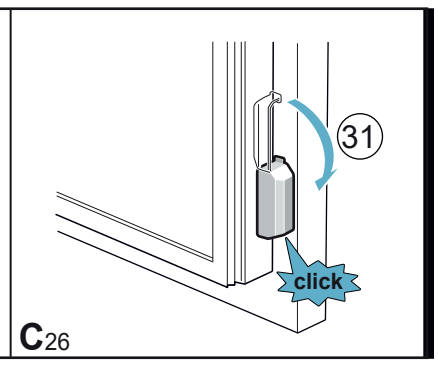

C26

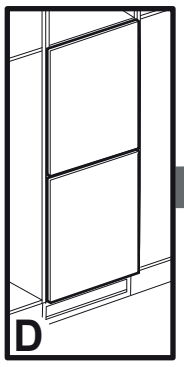
D

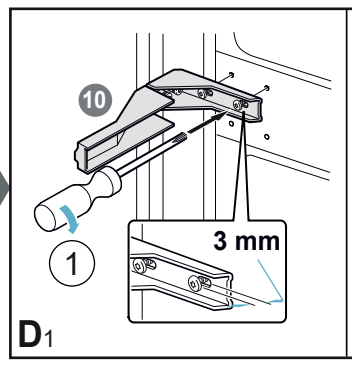

D1

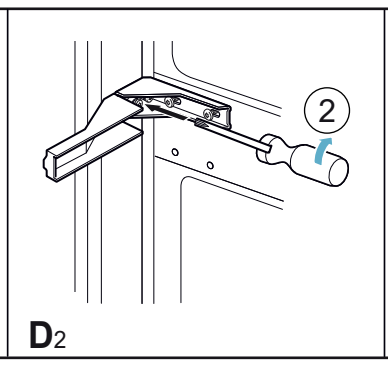

D2

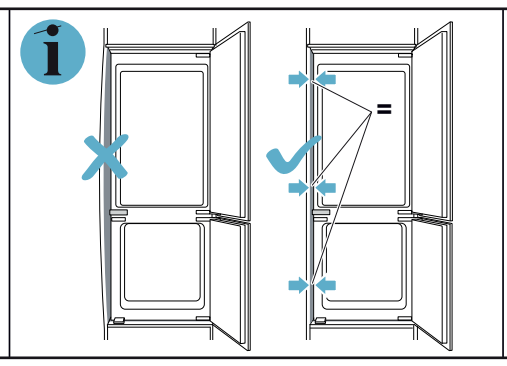

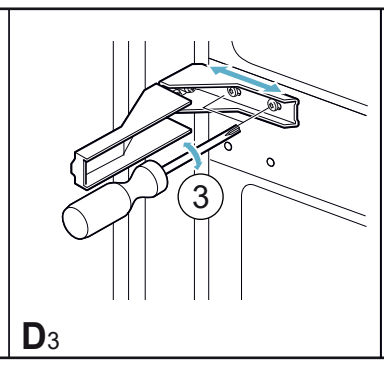

D3

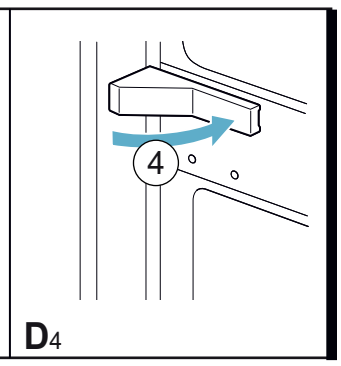

D4

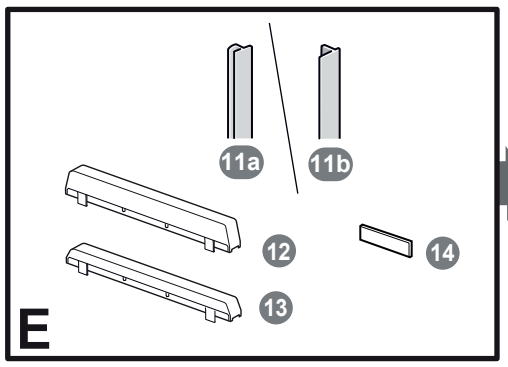

E

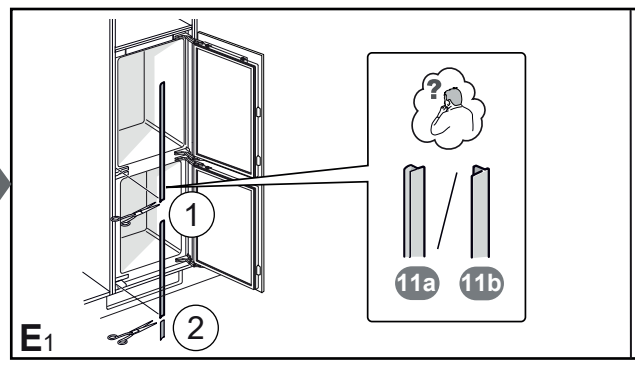

E1

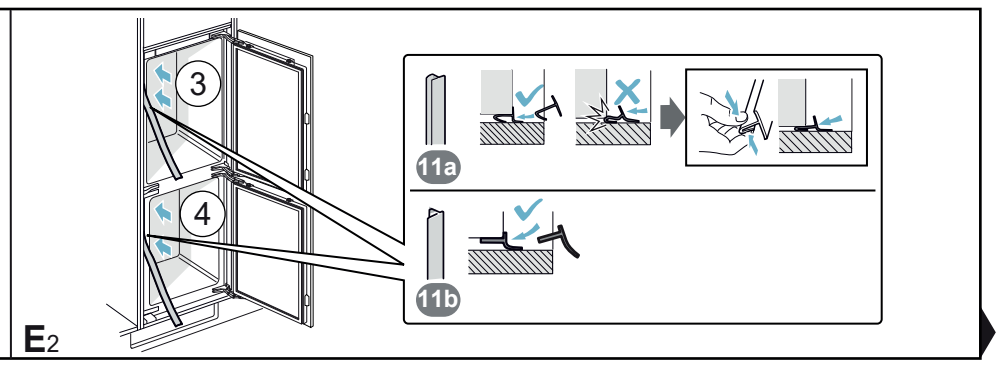

E2

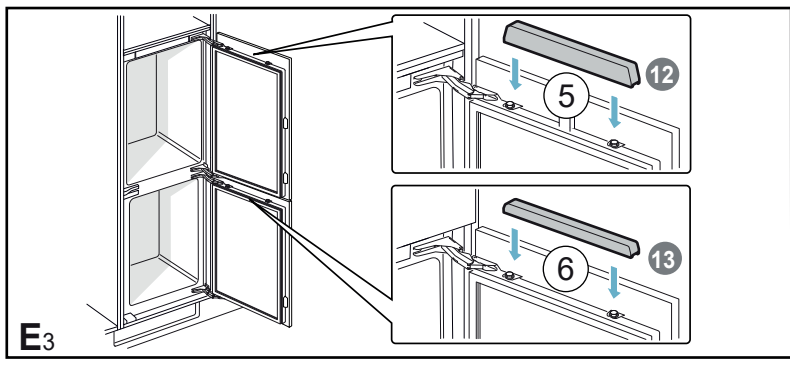

E3

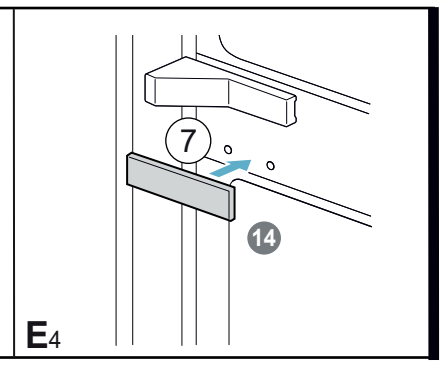

E4

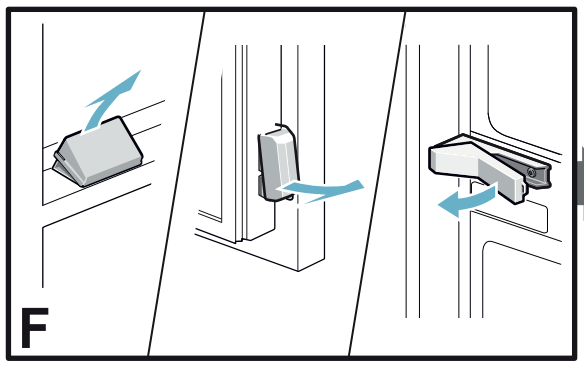
F

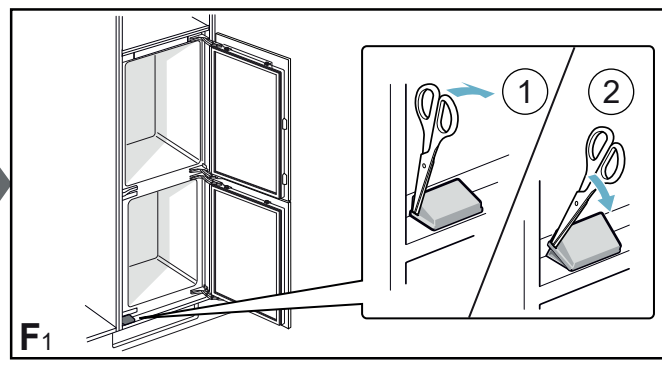

F1

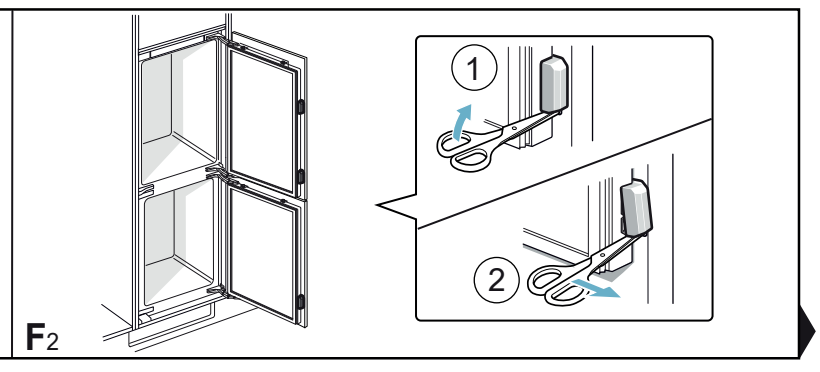

F2

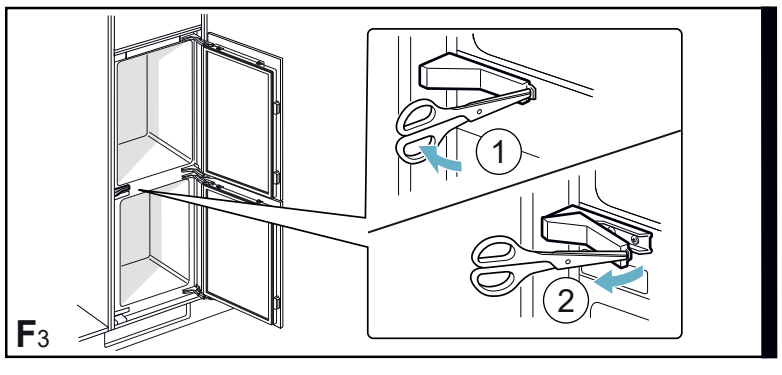

F3