USB Connectors
USB 3.1 Sockets Type C

SMT angled

T & R tape and reel

SMT

SPECIFICATION:

Operating Current (Max.):	5 A VBUS pin
Operating Current (Max.):	1.25 A VCONN Pin
Operating Temperature:	-25°C to 85°C
Insulation Resistance (Min.):	100 MΩ
Contact Resistance (Max.):	40 mΩ
Dielectric Strength:	100 Vac
Insertion Force (Max.):	20 N
Extraction Force:	20 N
Operating Life in Mating Cycles (Min.):	10000

MATERIAL:

Material (Terminal):	copper alloy, tin plated
Material (Housing):	steel, nickel plated
Material (Insulation):	thermoplastic
Flammability Class:	UL 94 V-0
Material (Contact Area):	copper alloy, gold plated

HANDLING:

Packaging:	taped

TOLERANCE:

.X:	± 0.30
.XX:	± 0.20

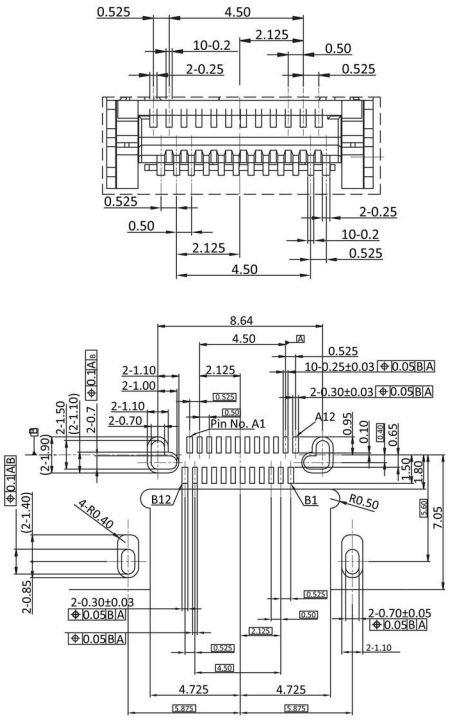

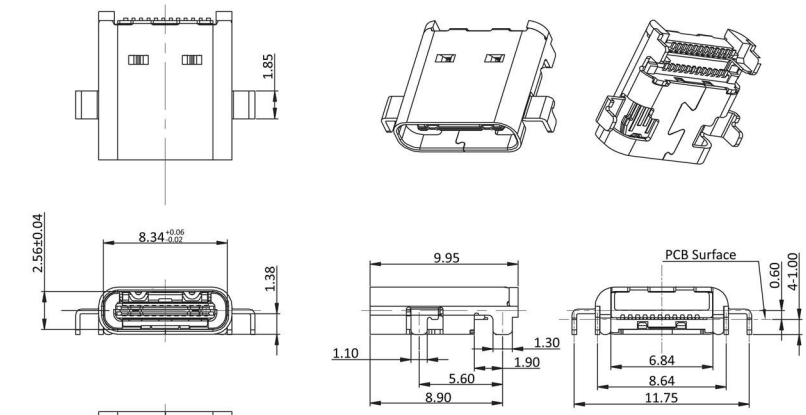

	A		B
1	GND	12	GND
2	SSTX +	11	SSRX +
3	SSTX -	10	SSRX -
4	VBUS	9	VBUS
5	CC1	8	RFU2
6	D+	7	D-
7	D-	6	D+
8	RFU1	5	CC2
9	VBUS	4	VBUS
10	SSRX -	3	SSTX -
11	SSRX +	2	SSTX +
12	GND	1	GND

Order Information

Identifier:	Contact Plating:	Version:
U31BU1C	G	SMT
USB 3.1 Socket Type C	gold plated	SMT