HWDK86AD

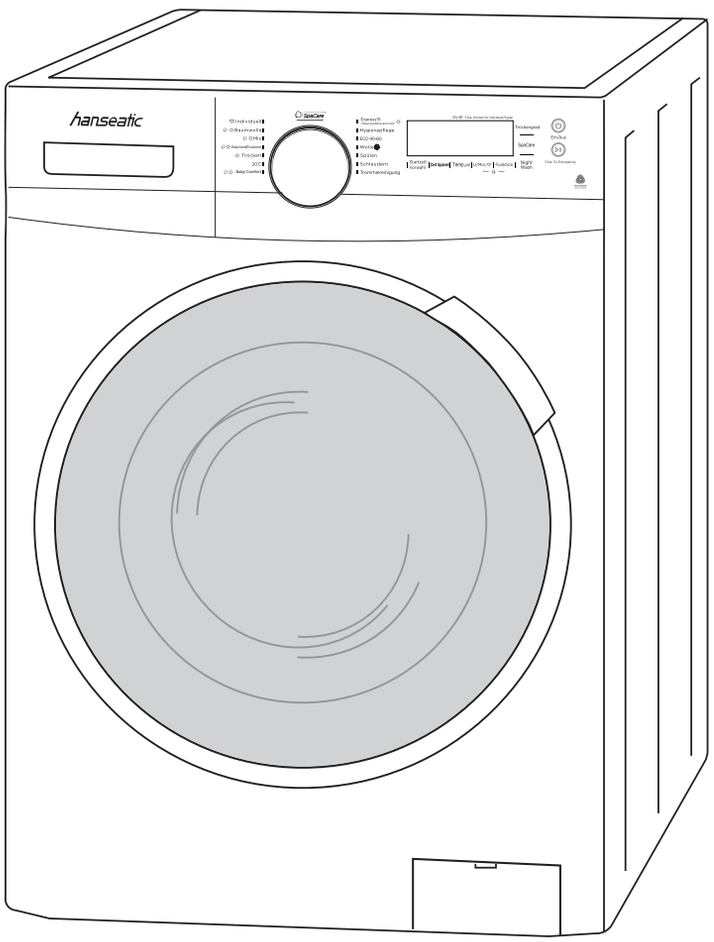

Gebrauchsanleitung

Waschtrockner

Anleitung/Version:
2401 00646 DE 20240920
Bestell-Nr.: 74932819
Nachdruck,
auch auszugsweise,
nicht gestattet!

Inhaltsverzeichnis

Bevor Sie das Gerät benutzen, lesen Sie bitte zuerst die Sicherheitshinweise und die Gebrauchsanleitung aufmerksam durch. Nur so können Sie alle Funktionen sicher und zuverlässig nutzen.
Beachten Sie unbedingt auch die nationalen Vorschriften in Ihrem Land, die zusätzlich zu den in dieser Anleitung genannten Vorschriften gültig sind.
Bewahren Sie alle Sicherheitshinweise und Anweisungen für die Zukunft auf. Geben Sie alle Sicherheitshinweise und Anweisungen an den nachfolgenden Verwender des Produkts weiter.

Informationen zum Aufstellen und]XP $QVFKOXVV GHV *HUlWV ¿QGHQ Sie ab Seite DE-36.

Begriffs- und Symbolerklärung 3
Begriffserklärung 3
Symbolerklärung 3

Sicherheit 4
Bestimmungsgemäßer Gebrauch 4
Sicherheitshinweise 4

Lieferung 12
Lieferumfang 12
Lieferumfang kontrollieren 12

Bedienelemente und Geräteteile 13

Bedienfeld 14
Symbole im Display 15

Programmtabelle. 16

Tabelle: Erweiterungsmöglichkeiten 19

Programm wählen. 20

Waschtrockner beladen 21
Wäsche einfüllen 21
Wasch-/Pflegemittel einfüllen. 21

Wasch-/Trockenprozess 23
Bevor Sie beginnen 23
Programm starten 23
Wäsche nachlegen 23
Programm abbrechen/ändern 24
Programmende 24

Zusätzliche Funktionen. 25
Individuelle Einstellungen ♡ 25
Startzeitvorwahl 25
Zeit sparen 26
Kindersicherung 26
Signaltöne 26
Night wash 26
Spacare 26
Funtionstaste 26

Tipps zum Waschen und Trocknen 28
Wäsche sortieren 28
Die Umwelt schonen 29
Wäschemenge 29
Geeignete Waschmittel und Dosierung .29

Pflege und Wartung 31
Regelmäßige Kontrolle 31
Regelmäßige Reinigung 31
Gerätetür reinigen 32
Trommel reinigen 32
Einspülschublade reinigen. 32
Siebe kontrollieren und reinigen 33
Fremdkörperfalle reinigen 34
Restwasser entleeren 35

Aufstellen und Anschließen 36
Transportieren 36
Transportsicherungen aus-/einbauen . .36
Gerät aufstellen 37
Gerät ausrichten. 37
Wasseranschluss 38
Elektrischen Anschluss herstellen 40
Kalibrierung 41

Fehlersuchtabelle 42

Service 46
Beratung, Reklamation und Bestellung .46
Reparaturen und Ersatzteile 46

Abfallvermeidung, Rücknahme und Entsorgung 47
Abfallvermeidung 47
Kostenlose Altgeräte-Rücknahme 47
Entsorgung. 47
Verpackung 48

Anhang 49
Produktdatenblatt nach VO (EU) Nr. 2019/2014 49
Technische Daten. 49

Begriffs- und Symbolerklärung

Begriffserklärung

Folgende Signalbegriffe finden Sie in dieser Gebrauchsanleitung.

⚠ WARNUNG

Dieser Signalbegriff bezeichnet eine Gefährdung mit einem mittleren Risikograd, die, wenn sie nicht vermieden wird, den Tod oder eine schwere Verletzung zur Folge haben kann.

⚠ VORSICHT

Dieser Signalbegriff bezeichnet eine Gefährdung mit einem niedrigen Risikograd, die, wenn sie nicht vermieden wird, eine geringfügige oder mäßige Verletzung zur Folge haben kann.

! HINWEIS

Dieser Signalbegriff warnt vor möglichen Sachschäden.

Symbolerklärung

Folgende Symbole finden Sie in dieser Gebrauchsanleitung bzw. auf dem Gerät:

Lesen Sie die Bedienungsanleitung.

Dieses Symbol verweist auf nützliche Zusatzinformationen.

Schutzerde

WOOLMARK
WOOL CARE

Das Wollprogramm dieser Waschmaschine wurde von The Woolmark Company für das Waschen von maschinenwaschbaren Produkten aus Wolle getestet und zugelassen, vorausgesetzt, dass die Produkte entsprechend den Pflegehinweisen auf dem Einnäh-Etikett und der Anleitung des Herstellers dieser Waschmaschine gewaschen werden.

M2306: HWDK86AD

Sicherheit

Bestimmungsgemäßer Gebrauch

Das Gerät ist zum Waschen, Spülen und Schleudern sowie zum Trocknen von Wäsche in haushaltsüblichen Mengen bestimmt.

Es wurde ausschließlich für den Einsatz im privaten Haushalt konzipiert und ist nicht für eine gewerbliche Nutzung oder Mehrfachnutzung (z. B. Verwendung durch mehrere Parteien in einem Mehrfamilienhaus) ausgelegt.

Das Gerät ist nur bestimmt für den Einsatz:
- bei einem Wasserdruck zwischen 0,05 MPa und 1,0 MPa (0,5 bar bis 10,0 bar)
- bei einer Höchstmenge an trockenen Textilien von bis zu 8 kg im Waschprogramm
- bei einer Höchstmenge an Wäsche von bis zu 6 kg im reinen Trocknerprogramm
- bei einer idealen Umgebungstemperatur für optimalen Betrieb von +15 °C bis +25 °C.

Das Gerät ist nicht für die Verwendung als Einbaugerät geeignet.

Das Gerät ist nicht säulenfähig.

Dieses Gerät ist nicht für die Verwendung durch Personen (einschließlich Kindern) mit eingeschränkten physischen, sensorischen oder geistigen Fähigkeiten oder Mangel an Erfahrung und Wissen bestimmt, sofern sie keine angemessene Aufsicht oder ausführliche Anleitung zur Benutzung durch eine für ihre Sicherheit verantwortliche Person erhalten.

Nehmen Sie keine technischen Veränderungen am Gerät vor.

Verwenden Sie das Gerät nur wie in dieser Gebrauchsanleitung beschrieben. Jede andere Verwendung gilt als nicht bestimmungsgemäß und kann zu Sachschäden oder sogar zu Personenschäden führen. Der Hersteller übernimmt keine Haftung für Schäden, die durch nicht bestimmungsgemäßen Gebrauch entstanden sind.

Sicherheitshinweise

In diesem Kapitel finden Sie allgemeine Sicherheitshinweise, die Sie zu Ihrem eigenen Schutz und zum Schutz Dritter stets beachten müssen. Beachten Sie zusätzlich die Warnhinweise in den einzelnen Kapiteln zu Inbetriebnahme, Pflege und Wartung, etc.

Risiken für Kinder und bestimmte Personengruppen

⚠ WARNUN

Gefahr für Kinder und Personen mit e geschränkten physischen, sensoriscl oder geistigen Fähigkeiter

- Diese Gerät kann von Kindern 8 Jahren und darüber sowie von F sonen mit verringerten physiche sensorischen oder mentalen Fäh keiten oder Mangel an Erfahrur und Wissen benuzt werden, wenn beaufsichtigt oder bezüglich des cheren Gebrauchs des Gerätes terwiesen wurden und die daraus sultierenden Gefahren verstehe
- Reinigung und Benutzer-Wartur dürfen nicht von Kindern ohne Beau sichtigung durchgeführt werder
- Kinder sollten beaufsichtigt werde um sicherzustellen, dass sie nicht dem Gerät spieler
- Kinder unter 3 Jahren sollten ferng halten werden, es sei denn, sie w den ständig beaufsichtigt

⚠ WARNUN

Erstickungsgefah
Kinder können sich in der Verpackun folie verfangen oder Kleinteile versch cken und daran ersticke

- Kinder nicht mit der Verpackungsfol spielen lasser

- Kinder daran hindern, Kleinteile vom Gerät abzuziehen oder aus dem Zubehörbeutel zu nehmen und in den Mund zu stecken.

Erstickungsgefahr!
Kinder und Haustiere können sich beim Spielen in der Trommel einschließen und so in Lebensgefahr geraten.

- Kinder dürfen nicht mit dem Gerät spielen.
- Dafür sorgen, dass Kinder keinen Zugriff auf das Gerät haben, wenn sie unbeaufsichtigt sind, gleichgültig, ob das Gerät ein- oder ausgeschaltet ist.
- Prüfen Sie das Gerät vor jedem Betrieb.

Verätzungsgefahr!
Reinigungsmittel verursachen schwere Verätzungen der Haut und schwere Augenschäden. Sie können Verätzungen in Mund und Rachen verursachen oder zum Ersticken führen.

- Verhindern, dass Kinder mit Reinigungsmitteln in Berührung kommen.
- Kinder vom geöffneten Gerät fernhalten. Es können noch Reste von Reinigungsmitteln im Inneren vorhanden sein. Das Wasser im Inneren ist kein Trinkwasser.
- Sofort einen Arzt aufsuchen, wenn das Kind Reinigungsmittel in den Mund bekommen hat.

Vergiftungsgefahr!
Wasch- und P egemittel können gesundheitsschädlich sein.

- Diese Mittel für Kinder und Haustiere unzugänglich aufbewahren.

Risiken im Umgang mit elektrischen Haushaltsgeräten

⚠ WARNUNG

Stromschlaggefahr!
Das Berühren spannungsführender Teile kann zu schweren Verletzungen oder zum Tod führen.

- Gerät nur in Innenräumen verwenden.
- Gerät nie in feuchter oder nasser Umgebung verwenden.
- Gerät nicht in Betrieb nehmen oder weiter betreiben, wenn es
  - sichtbare Schäden aufweist, z. B. die Anschlussleitung defekt ist.
  - Rauch entwickelt oder verbrannt riecht.
  - ungewohnte Geräusche von sich gibt.

  In diesen Fällen Netzstecker aus der Steckdose ziehen oder Sicherung ausschalten bzw. herausdrehen und unseren Service kontaktieren (siehe Seite DE-46).
- Das Gerät entspricht der Schutzklasse I und darf nur an eine Steckdose mit ordnungsgemäß installiertem Schutzleiter angeschlossen werden. Beim Anschließen darauf achten, dass die richtige Spannung anliegt. Nähere Informationen hierzu nden Sie auf dem Typenschild.
- Falls der Netzstecker nach dem Anschluss nicht mehr zugänglich ist, muss eine allpolige Trennvorrichtung gemäß Überspannungskategorie III in der Hausinstallation mit mindestens 3 mm Kontaktabstand vorgeschaltet sein; ziehen Sie gegebenenfalls eine Fachkraft zurate (siehe „Service“ auf Seite DE-46).

- Das Gerät darf erst nach Abschluss sämtlicher Installations- und Montagearbeiten an das elektrische Netz angeschlossen werden.
- Keine Gegenstände in oder durch die Gehäuseöffnungen, die Einspülschublade oder die Waschtrommel stecken und sicherstellen, dass auch Kinder keine Gegenstände hineinstecken können.
- Gerät, Netzstecker und Netzkabel von offenem Feuer und heißen Flächen fernhalten.
- Netzkabel nicht knicken oder klemmen und nicht über scharfe Kanten legen. Die Folge kann Kabelbruch sein.
- Netzstecker nie am Netzkabel aus der Steckdose ziehen, immer den Netzstecker selbst anfassen.
- Netzstecker niemals mit feuchten Händen anfassen.
- Netzkabel und Netzstecker nie in Wasser oder andere Flüssigkeiten tauchen.
- Im Fehlerfall sowie vor Reinigung und Wartung den Netzstecker ziehen bzw. Sicherung ausschalten/herausdrehen.
- Gerät niemals mit einem Hochdruck- oder Dampfreiniger reinigen. Wasserdampf könnte durch Ritzen zu unter Spannung stehenden Bauteilen gelangen.
- In diesem Gerät be nden sich elektrische und mechanische Teile, die zum Schutz gegen Gefahrenquellen unerlässlich sind. Bei Reparaturen dürfen ausschließlich Teile verwendet werden, die den ursprünglichen Gerätedaten entsprechen.
- Eingriffe und Reparaturen am Gerät dürfen ausschließlich autorisierte Fachkräfte vornehmen, so wie unser Service (siehe Seite DE-46).
- Durch eigenständige Reparaturen am Gerät können Sach- und Personenschäden entstehen und die Haftungs- und Garantieansprüche verfallen. Niemals versuchen, das defekte – oder vermeintlich defekte – Gerät selbst zu reparieren.
- Wenn die Netzanschlussleitung dieses Geräts beschädigt wird, muss sie durch den Hersteller oder seinen Kundendienst oder einer ähnlich quali - zierten Person ersetzt werden, um Gefährdungen zu vermeiden.
- Gerät regelmäßig auf Schäden prüfen.

⚠ VORSICHT!

Brandgefahr!
Unsachgemäßer Umgang mit dem Gerät kann zu einem Brand führen.

- Gerät nur an eine ordnungsgemäß installierte Schutzkontakt-Steckdose anschließen. Der Anschluss an eine Steckdosenleiste oder eine Mehrfachsteckdose ist unzulässig.
- Das Gerät darf nicht über eine externe Schaltvorrichtung wie z. B. eine Zeitschaltuhr versorgt werden oder mit einem Schaltkreis verbunden sein, der regelmäßig durch eine Einrichtung ein- und ausgeschaltet wird.

Risiken im Umgang mit Waschtrocknern

⚠ WARNUNG

Brandgefahr!
Unsachgemäßer Umgang mit dem Gerät kann zu einem Brand und zu Sachschäden führen.

- Der Trommeltrockner/Waschtrockner darf nicht benutzt werden, wenn industrielle Chemikalien für die Reinigung benutzt worden sind.
- Beachten, dass das Flusensieb regelmäßig zu reinigen ist.
- Beachten, dass Flusen um den Trockner herum nicht angesammelt werden dürfen.
- Belüftungsöffnungen im Gerätegehäuse nicht verschließen.
- Keine ungewaschenen Wäschestücke im Trommeltrockner/Waschtrockner trocknen.
- Wäschestücke, die z. B. mit Speiseöl, Aceton, Alkohol, Benzin, Petroleum, Kerosin, Fleckenentferner, Terpentin, Wachs oder Wachsentferner verschmutzt worden sind, sollten vor dem Trocknen im Trommeltrockner/Waschtrockner in heißem Wasser mit einer zusätzlichen Menge Waschmittel gewaschen werden.
- Niemals Wäschestücke trocknen, die mit industriellen Chemikalien, Speise- und anderen Ölen, Aceton, Alkohol, Benzin, Petroleum, Kerosin, Fleckenentferner, Terpentin, Wachs und Wachsentferner oder mit brennbaren Flüssigkeiten gereinigt, gewaschen, getränkt oder bespritzt sind. Wäschestücke, die diese Materialien enthalten, immer zunächst von Hand mit etwas Waschmittel waschen. Am Ende des Waschprogramms einen zusätzlichen Spülgang durchführen. Wäschestücke im Freien lufttrocknen. Ansonsten kann sich die Wäsche selbst nach dem Trockenvorgang im oder auch außerhalb des Geräts selbst entzünden.
- Gegenstände, wie z. B. Schaumgummi (Latexschaumgummi), Duschhauben, wasserdichte Textilien, gummierte Artikel und Kleidungsstücke oder Kopfkissen mit Schaumgummi ocken, sollten im Trommeltrockner/Waschtrockner nicht getrocknet werden.
- Weichspüler oder ähnliche Produkte sollten so verwendet werden, wie es in den Anweisungen für den Weichspüler festgelegt ist.
- Bei Wahl eines Wasch-/Trockenprogramms oder eines reinen Trockenprogramms keine Dosierkugel o. Ä. in die Trommel geben.
- Alle Gegenstände aus den Taschen, wie z. B. Feuerzeuge und Zündhölzer, sind zu entfernen.
- Den Trommeltrockner/Waschtrockner niemals vor dem Ende des Trockenzyklus ausschalten, es sei denn, alle Wäschestücke werden rasch entnommen und so ausgebreitet, dass die Wärme abgegeben werden kann.
- Das Gerät nicht auf Teppichboden stellen. Es wird sonst nicht ausreichend belüftet, kann überhitzen und so beschädigt werden. Beachten, dass Ventilationsöffnungen nicht durch Teppichboden verstopft werden dürfen.

- Das Gerät nicht hinter einer verschließbaren Tür, einer Schiebetür oder einer Tür mit einem Scharnier, das dem Türscharnier des Trommeltrockners/ Waschtrockners so gegenüberliegt, dass ein vollständiges Öffnen der Tür des Trockners eingeschränkt ist, aufstellen.

Explosionsgefahr!
Unsachgemäßer Umgang mit dem Gerät kann zu einem Brand und zu Explosionen führen.

- Weil Brandgefahr besteht, dürfen Textilien oder Produkte niemals getrocknet werden,
  - wenn industrielle Chemikalien für die Reinigung benutzt worden sind (z. B. in einer Chemischen Reinigung).
  - die überwiegend Schaumgummi-, Gummi- oder gummiähnliche Anteile enthalten, z. B. Gegenstände wie z. B. Schaumgummi (Latexschaumgummi), Duschhauben, wasserdichte Textilien, gummierte Artikel und Kleidungsstücke oder Kopfkissen mit Schaumgummiflocken.
  - die mit Füllungen versehen und beschädigt sind (z. B. Kissen oder Jacken). Die herausfallende Füllung kann einen Brand verursachen.
- In dem Gerät keine Textilien aufbewahren, die kurz zuvor mit chemischen Reinigungsmitteln wie Testbenzin oder Fleckentferner behandelt wurden. Solche Textilien zunächst auslüften und trocknen lassen.
- Keine brennbaren oder leicht entzündlichen Flüssigkeiten in der Nähe des Geräts aufbewahren.
- Keine brennenden oder leicht entammbaren Gegenstände in der Nähe des Geräts aufstellen.
- Den Bereich um das Gerät herum sauber halten. Staub von Kohle oder Mehl kann sich entzünden.

⚠ VORSICHT

Verbrennungsgefahr!
Unsachgemäßer Umgang mit dem Gerät kann zu Verbrennungen führen.

- Das Glas der Gerätetür kann während des Betriebs heiß werden. Das Glas während des Betriebs nicht berühren.
- Den Wasser-Ablaufschlauch während des Abpumpens nicht berühren. Die Rückwand während des Trocknens nicht berühren.

Verbrühungsgefahr!
Unsachgemäßer Umgang mit dem Gerät kann zu Verbrühungen durch heiße Waschlauge führen.

- Wasser-Ablaufschlauch ausreichend am Ausguss oder an der Badewanne befestigen, damit er nicht durch den beim Abpumpen entstehenden Rückstoß wegrutschen kann. Maximale Höhe von 80 cm beachten!
- Falls der Wasser-Ablaufschlauch am Ausguss- oder Badewannenrand befestigt ist, den Ausguss oder die Badewanne nicht benutzen während der Waschtrockner in Betrieb ist.
- Ablaufschlauch während des Abpumpens nicht berühren, da die Waschlauge heiß sein kann.

- Insbesondere bei Ausgüssen darauf achten, dass der Querschnitt der Abussleitung groß genug ist, sodass der Ausguss nicht überlaufen kann.
- Waschlauge abkühlen lassen, bevor sie abgelassen wird (z. B. im Rahmen einer Notentleerung).
- Gerätetür niemals gewaltsam öffnen.

Verletzungsgefahr!
Unsachgemäßer Umgang mit dem Gerät kann zu Verletzungen führen.

- Das Gerät ist sehr schwer. Niemals alleine, sondern immer zu zweit transportieren oder tragen.
- Alle Hindernisse auf dem Transportweg und dem Aufstellort beseitigen, wie z. B. Türen öffnen und auf dem Boden liegende Gegenstände wegräumen.
- Geöffnete Gerätetür nicht als Trittbrett, Sitz oder zum Abstützen verwenden. Darauf achten, dass Kinder oder Haustiere sich nicht auf die geöffnete Gerätetür stellen bzw. setzen.
- Schläuche und Netzkabel so verlegen, dass sie nicht zur Stolperfalle werden.

! HINWEIS

Gefahr von Sachschäden!
Unsachgemäßer Umgang mit dem Gerät kann zu Beschädigungen führen.

- Soll das Gerät mit einer Transportkarre gefahren werden, muss es so angehoben werden, wie es auf der Verpackung gezeigt ist. Das Gerät stets senkrecht transportieren.
- Keine scharfen oder spitzen Gegenstände beim Auspacken verwenden.
- Gerät nicht an der Gerätetür oder Einspülschublade ziehen oder heben.
- Vor der Inbetriebnahme alles Verpackungsmaterial entfernen.
  Darauf achten, dass das Gerät nicht mit dem Stromnetz verbunden ist, wenn die Transportsicherungen aus- oder eingebaut werden.
- Das Gerät nicht auf Teppich oder Teppichboden stellen. Es wird sonst nicht ausreichend belüftet, kann überhitzen und dadurch beschädigt werden.
- Bei Teppich, Teppichboden, Parkett oder einem Holzbalkenboden eine stabile Holzplatte von mindestens 60 × 60 cm unter das Gerät legen.
- Während des Trocknens den Raum gut belüften. Die Raumtemperatur während des Trocknens nicht über 35 °C ansteigen lassen.
- Das Gerät nicht auf andere Geräte stellen und nicht als Untersatz für andere Geräte verwenden (z. B. für Waschmaschinen). Nicht auf das Gerät setzen oder stellen.
- Das Gerät niemals vor dem Ende des Trockenzyklus ausschalten, es sei denn, alle Wäschestücke werden rasch entnommen und so ausgebreitet, dass die Wärme abgegeben werden kann.

Unsachgemäßer Umgang mit dem Gerät kann zu Wasserschäden führen.

- Solange der Wasserhahn geöffnet ist, das Gerät nicht für längere Zeit unbeaufsichtigt lassen. Bei einer Entleerung infolge von Undichtheit können erhebliche Mengen Wasser austreten.
- Das Gerät nicht an die Warmwasserversorgung anschließen.

- Das Gerät nur an eine Wasserversorgung mit einem Einlasswasserdruck zwischen 0,05 Mpa und 1,0 Mpa (0,5 bis 10,0 bar) anschließen. Bei höherem Wasserdruck muss ein Druckminderer installiert werden. Den Wasserdruck beim örtlichen Wasserwerk anfragen.
- Den Wasserzulaufhahn nach jeder Benutzung schließen.
- Den Wasserzulaufhahn vor dem Reinigen des Wasser-Zulaufsiebs schließen.
- Die mit dem Gerät gelieferten neuen Schlauchsets sind zu verwenden. Alte Schlauchsets sollten nicht wiederverwendet werden.
- Den Wasser-Ablaufschlauch nicht verlängern oder durch einen anderen Schlauch ersetzen.
- Darauf achten, dass der Wasser-Ablaufschlauch nicht geknickt oder verdreht ist.
- Beachten, dass bei einer Notentleerung erhebliche Mengen Wasser austreten können.
- Dafür sorgen, dass sich der Wasser-Ablauf höchstens 80 cm über dem Boden be ndet.
- Beachten, dass der Wasser-Ablaufschlauch sich in den Halteclips auf der Geräterückseite be ndet, damit die Krümmung stets oberhalb der Wasserlinie im Gerät bleibt.
- Das Schlauchende nicht in das abgepumpte Wasser eintauchen.
- Steht das Gerät in einem frostgefährdeten Raum, kann bei Minusgraden das Restwasser im Gerät gefrieren. Deshalb bei Frostgefahr das Restwasser ablassen, um Schäden am Gerät zu vermeiden.
- Nie versuchen, die Gerätetür bei laufendem Programm oder nach Ende eines Programms mit Gewalt zu öffnen.

Unsachgemäßes Reinigen des Geräts kann Schäden am Gerät verursachen.

- Auf keinen Fall aggressive, körnige, soda-, säure-, lösemittelhaltige oder schmirgelnde Reinigungsmittel verwenden. Diese können die Ober ächen beschädigen oder die Gummimanschette spröde und brüchig machen. Empfehlenswert sind Allzweckreiniger mit einem neutralen pH-Wert.
- Zum Reinigen der Gummimanschette keine spitzen, scharfen oder kantigen Gegenstände verwenden. Diese können die Gummimanschetten undicht machen.
- Siebe und Dichtungen regelmäßig kontrollieren und reinigen.
- Defekte Siebe und Dichtungen umgehend austauschen. Gerät niemals ohne Siebe oder mit defekten Sieben oder Dichtungen betreiben.
- Spritzen Sie das Gerät niemals mit einem Wasserstrahl oder einem Hochdruckreiniger ab.

Anhang

Produktdatenblatt nach VO (EU) Nr. 2019/2014

Das Produktdatenblatt zu Ihrem Gerät wird Ihnen online zur Verfügung gestellt.

Gehen Sie auf https://eprel.ec.europa.eu und geben Sie die Modellkennung Ihres Geräts ein, um das Produktdatenblatt abzurufen.

Die Modellkennung Ihres Geräts finden Sie unter Technische Daten.

Technische Daten

Bestellnummer	74932819
Modell	HWDK86AD
Versorgungsspannung / Frequenz / Absicherung	220 - 240 V / 50 Hz / 10 A
Leistungsaufnahme	1900 W
Gerätemaße (Höhe × Breite × Tiefe mit Anschlüssen)	85,0 cm × 60,0 cm × 48,0 cm
Leergewicht	63 kg
Wasserdruck (Fließdruck)	0,05–1,0 MPa / 0,5–10 bar bar
Aus-Zustand	0,50 W
Bereitschaftszustand	- W
Zeitvorwahl	4,00 W
Vernetzter Bereitschaftsbetrieb	- W

HWDK86AD

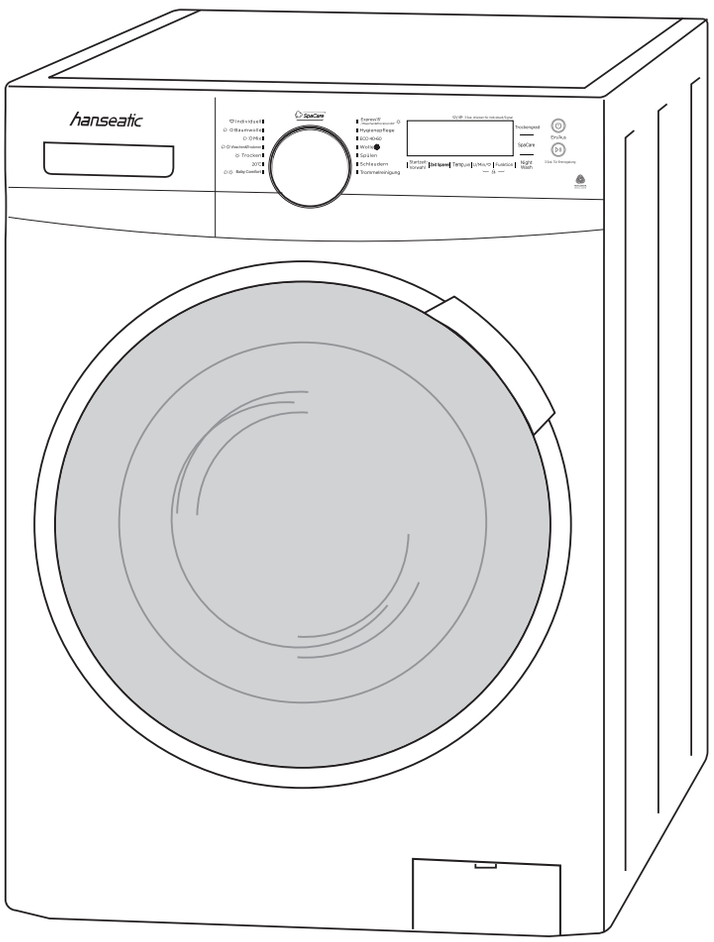

User manual

Washer-dryer

Manual/version:
2401 00646 EN 20240920
Article no.: 74932819
Reproduction, even of excerpts, is not permitted!

Table of contents

Please read through the safety instructions and user manual carefully before using the appliance. This is the only way you can use all the functions reliably and safely.
Be sure to also observe the national regulations in your country, which are valid in addition to the regulations specified in this user manual.
Keep all safety notices and instructions for future reference. Pass all safety notices and instructions on to the subsequent user of the product.

You can find more information on setting up and connecting the appliance from page EN-33.

Explanation of terms/symbols EN-3
Explanation of terms EN-3
Explanation of symbols EN-3

Safety EN-4
Intended use. EN-4
Safety notices. EN-4

Delivery EN-11
Package contents. EN-11
Check package contents EN-11

Operating controls and appliance parts EN-12

Control panel. EN-13

Control panel. EN-14
Display symbols EN-14

Cycle table EN-15

Table: Further options EN-16

Selecting the cycle EN-18

Loading the washer-dryer EN-19
Loading laundry EN-19
Dispensing washing detergent/ fabric-care products EN-19

Washing/drying process EN-21
Before getting started. EN-21
Starting the cycle EN-21
Adding laundry EN-21
Cancelling/modifying a cycle EN-22
Cycle end EN-22

Additional functions. EN-23
Customised settings EN-23
Start time pre-selection EN-23
Child lock EN-24
Signal tones EN-24
Night wash EN-24
Spacare EN-24
Function button EN-24

Tips for washing and drying EN-25
Sorting through laundry EN-25
Protecting the environment EN-26
Amount of laundry EN-26
Suitable laundry and dosage EN-26

Care and maintenance EN-28
Regular checks EN-28
Regular cleaning EN-28
Cleaning the appliance door EN-29
Cleaning the drum EN-29
Cleaning the dispensing drawer . . EN-29
Checking and cleaning the filters. . EN-30
Cleaning the lint trap EN-31
Emptying residual water. EN-31

Set-up and connection EN-33
Transport EN-33
Removing/installing transport safety devices. EN-33
Setting up the appliance EN-34
Aligning the appliance EN-34
Water connection EN-35
Creating an electrical connection. . EN-37
Calibration EN-37

Troubleshooting table EN-38

Service EN-42
Advice, complaints and orders. . . . EN-42
Repairs and spare parts. EN-42

Waste prevention, free return and disposal EN-43
Waste prevention EN-43
Free return of old electrical appliances EN-43
Disposal EN-43
Packaging. EN-44

Apendix EN-45
Product fiche concerning Regulation (EU) No 2019/2014 . . . EN-45
Technical specifications EN-45

Explanation of terms/symbols

Explanation of terms

The following signal terms can be found in this user manual.

WARNING

This signal term indicates a hazard with a medium level of risk which, if not avoided, could result in death or serious injury.

CAUTION

This signal term indicates a hazard with a low level of risk which, if not avoided, could result in minor or moderate injury.

NOTICE

This signal term warns against possible damage to property.

Explanation of symbols

The following symbols can be found in this user manual and/or on the appliance:

Read these instructions.

This symbol refers to useful additional information.

Protective earthing

WOOLMARK WOOL CARE

The wool wash cycle of this machine has been tested and approved by The Woolmark Company for the washing of machine washable wool products provided that the products are washed according to the instructions on the garment label and those issued by the manufacturer of this washing machine

M2306: HWDK86AD

Safety

Intended use

The appliance is designed for washing, rinsing, spinning and drying laundry in normal household quantities.

It was designed exclusively for use in private households and is not designed for commercial use or multiple use (e.g. use by several parties in a block of flats).

The appliance is intended only for use:
– with a water pressure of between 0.05 MPa and 1.0 MPa (0.5 bar to 10.0 bar)
– with up to 8 kg of dry textiles (max. quantity) in the wash cycle
– with up to 6 kg of laundry (max. quantity) in the drying cycle only
– at an ideal ambient temperature of +15 °C to +25 °C for optimal operation.

The appliance is not suitable for use as a built-in appliance.

The appliance is non-stackable.

This appliance is not intended for use by persons (including children) with reduced physical, sensory or mental capabilities, or lack of experience and knowledge, unless they have been given supervision or instruction concerning use of the appliance by a person responsible for their safety.

Do not make any technical changes to the appliance.

Use the appliance only as described in this user manual. Any other use is deemed improper and may result in damage to property or even personal injury. The manufacturer accepts no liability for damage caused by improper use.

Safety notices

In this chapter you will find general safety notices which you must always observe for your own protection and that of third parties. Please also observe the warning notices in the individual chapters on commissioning, care and maintenance, etc.

Risks to children and certain groups of individuals

⚠ WARNING

Danger for children and people with limited physical, sensory or mental capacity!

- This appliance can be used by children aged from 8 years and above and persons with reduced physical, sensory or mental capabilities or lack of experience and knowledge if they have been given supervision or instruction concerning use of the appliance in a safe way and understand the hazards involved.
- Cleaning and user maintenance shall not be performed by children without supervision.
- Children should be supervised to ensure that they do not play with the appliance.
- Children of less than 3 years should be kept away unless continuously supervised.

Risks to children

⚠ WARNING

Risk of suffocation!
Children can become entangled in the packaging film or swallow small parts and suffocate.

- Do not allow children to play with the packaging film.
- Prevent children from pulling small parts from the device or taking them out of the accessory bag and putting them in their mouths.

Risk of suffocation!
Children and pets could lock themselves in the drum when playing and so endanger their lives.

- Children shall not play with the appliance.
- Ensure that children have no access to the appliance when unsupervised, regardless of whether the appliance is switched on or off.
- Check the appliance prior to each operation.

Risk of corrosion!
Detergents cause severe burns of the skin and severe eye damage. They can cause burns in the mouth and throat or lead to suffocation.

- Prevent children from coming into contact with detergents.
- Keep children away from the open appliance. There may still be remnants of detergents inside. The water inside is not potable drinking water.
- Consult a doctor immediately if the child has been exposed to detergent in their mouth.

Risk of poisoning!
Washing detergents and fabric-care products can be harmful to health.

- Keep these products out of the reach of children and pets.

Risks in handling household electrical appliances

⚠ WARNING

Risk of electric shock!
Touching live parts may result in severe injury or death.

- Only use the appliance indoors.
- Never use the appliance in a damp or wet environment.
- Do not operate or continue to operate the appliance if it
  - shows visible signs of damage, e.g. the power cord is defective.
  - starts smoking or there is a smell of burning.
  - makes unfamiliar noises.

  In these cases, remove the mains plug from the socket or isolate/unscrew the fuse and contact our service department (see page EN-42).
- The appliance corresponds to protection class I and may only be connected to a plug with a protective conductor that has been properly installed. When connecting the appliance, make sure that the voltage is correct. You can find more detailed information about this on the nameplate.
- If the mains plug is no longer accessible after installation, an all-pole disconnecting device complying with overvoltage category III must be connected to the house wiring with a contact gap of at least 3 mm; consult a qualified professional if necessary (see “Service” on page EN-42).
- The appliance must only be connected to the mains after completion of all installation and assembly work.

- Do not put any objects in or through the housing openings, the dispensing drawer or the washing drum, and also make sure that children cannot insert any objects through them.
- Keep the appliance, the mains plug and the mains cord away from open flames and hot surfaces.
- Do not kink or pinch the mains cord or lay it over sharp edges. This can result in a break in the cable.
- Never pull the mains plug out of the socket by the mains cord, always hold the mains plug itself.
- Never touch the mains plug with wet hands.
- Never immerse the mains cord or mains plug in water or any other liquids.
- In the event of a fault, as well as before cleaning and maintenance, unplug the mains plug or isolate/unscrew the fuse.
- Never clean the appliance with a high-pressure cleaner or steam cleaner. Steam could reach live components through cracks.
- This appliance contains electrical and mechanical parts which are essential for protection against potential sources of danger. Only parts corresponding to the original appliance specifications may be used for repairs.
- Changes and repairs to the appliance may be carried out only by authorised specialists, such as our service team (see page EN-42).
- Independent repairs made to the appliance may cause damage to property and personal injury and void liability and warranty claims. Never try to repair a defective or suspected defective appliance yourself.
- If the mains cord of the appliance is damaged, it must be replaced by the manufacturer, the customer service department or a similarly qualified person in order to prevent hazards.
- Check the appliance regularly for damage.

⚠ CAUTION

Fire hazard!
Improper handling of the appliance can lead to fire.

- Connect the appliance only to a properly installed and earthed electric socket. Do not connect to a multi-socket extension cable or a multi-socket plug.
- The appliance must not be supplied through an external switching device, such as a timer, or connected to a circuit that is regularly switched on and off by a utility.

Risks associated with using washer-dryers

⚠ WARNING

Fire hazard!
Improper handling of the appliance can lead to fire and property damage.

- The tumble dryer/washing dryer is not to be used if industrial chemicals have been used for cleaning.
- Note that the lint trap has to be cleaned frequently.
- Note that lint must not to be allowed to accumulate around the tumble dryer.

- In the appliance enclosure, keep ventilation openings clear of obstruction.
- Do not dry unwashed items in the tumble dryer/washing dryer.
- Items that have been soiled with substances such as cooking oil, acetone, alcohol, petrol, kerosene, spot removers, turpentine, waxes and wax removers should be washed in hot water with an extra amount of detergent before being dried in the tumble dryer/washing dryer.
- Never dry items in the drum dryer which have been cleaned, washed, soaked or sprayed with industrial chemicals, cooking oil and other oils, acetone, alcohol, petrol, petroleum, kerosene, stain remover, turpentine, wax, wax remover or flammable liquids. Always wash laundry items that contain these materials first by hand with a little washing detergent. At the end of the washing cycle, run an additional rinse cycle. Air dry laundry items outdoors. Otherwise, the laundry may ignite inside or outside the appliance even after the drying cycle has completed.
- Items such as foam rubber (latex foam), shower caps, waterproof textiles, rubber backed articles and clothes or pillows fitted with foam rubber pads should not be dried in the tumble dryer/washing dryer.
- Fabric softeners or other similar products should be used as described in their respective use instructions.
- When selecting a washing/drying cycle or solely a drying cycle, do not place items including dosing balls or similar in the drum.
- Remove all objects from pockets such as lighters and matches.
- Never stop a tumble dryer/washing dryer before the end of the drying cycle unless all items are quickly removed and spread out so that the heat is dissipated.
- Do not place the appliance on carpeted flooring. Otherwise, it may not be able to properly ventilate, which can result in overheating and damage. Note that the openings must not be obstructed by a carpet.
- The appliance must not be installed behind a lockable door, a sliding door or a door with a hinge on the opposite side to that of the tumble dryer/washing dryer, in such a way that a full opening of the tumble dryer/washing dryer door is restricted.

Danger of explosion!
Improper handling of the appliance can lead to fire and explosion.

- Due to the risk of fire, never use the drum dryer to dry fabrics or other objects if
  - industrial chemicals have been used for cleaning (e.g. for chemical cleaning).
  - the items contain a large amount of foam rubber, rubber or rubber-like components, such as foam rubber (latex foam), shower caps, waterproof textiles, rubber backed articles and clothes or pillows fitted with foam rubber pads,
  - they contain filling and are damaged (e.g. pillows or jackets); the filling may escape and cause a fire.

- Do not store any laundry items that have recently been treated with chemical detergents such as white spirit or stain remover in the appliance. Such items should first be left to air and dry.
- Do not store any combustible or easily flammable liquids near the appliance.
- Do not place any combustible or easily flammable objects near the appliance.
- Keep the area around the appliance clean. Dust from coal or flour can ignite.

⚠ CAUTION

Risk of burns!
Improper handling of the appliance can lead to burns.

- The glass of the appliance door can get hot during operation. Do not touch the glass when the appliance is running.
- Do not touch the water outlet hose during pumping. Do not touch the rear wall during the drying process.

Risk of scalding!
Improper handling of the appliance can lead to scalding caused by hot suds.

- Fix the water outlet hose properly to the sink or bath to prevent it from slipping due to the recoil caused by pumping. Adhere to the maximum height of 80 cm!
- If the water outlet hose is fixed to the edge of the drain or bath, do not use the drain or bath whilst the washer-dryer is in operation.
- Do not touch the outlet hose during pumping as the suds may be hot.
- For drains make sure that the cross section of the discharge pipe is great enough that the drain cannot overflow.
- Leave the suds to cool before draining them (e.g. during emergency draining).
- Never open the appliance door with force.

Risk of injury!
Improper handling of the appliance may result in injury.

- The appliance is very heavy. Never transport or carry the appliance alone; always with the assistance of another person.
- Remove all obstacles on the transport route and from the installation location, e.g. open doors and clear away objects lying on the floor.
- Do not use the open door as a step, seat or for support. Make sure that children and pets do not stand or sit on the open appliance door.
- Take care to prevent any risk of tripping when laying out the mains cord and hoses.

! NOTICE

Risk of damage to property!
Improper handling of the appliance may result in damage.

- If a trolley is used to move the appliance, the appliance must be lifted as shown on the packaging. Always transport the appliance vertically.

- Do not use any sharp or pointed objects when unpacking the appliance.
- Do not use the appliance door or the dispensing drawer to pull or lift the appliance.
- Remove all packaging material before first use.
  Make sure the appliance is not connected to the power supply whilst the transport safety devices are being removed or installed.
- Do not stand the appliance on rugs or carpets. Otherwise, it may not be able to properly ventilate, which can result in overheating and damage.
- For rugs, carpet, parquet or wooden floorboards, place a stable wooden plate measuring at least 60 × 60 cm underneath the appliance.
- Keep the room well ventilated during the drying process. Do not allow the room temperature to exceed 35 °C during the drying process.
- Do not place the appliance on top of other appliances and do not use it as a base for other appliances (e.g. for washing machines). Do not sit or stand on the appliance.
- Never turn off the appliance before the end of a drying cycle, unless you are able to quickly remove all laundry items and spread them out to dissipate the heat.

Improper handling of the appliance can lead to water damage.

- Do not leave the appliance unsupervised for long periods of time while the valve is open. When draining as a result of leakiness, substantial amounts of water may leak out.
- Do not connect the appliance to the hot water supply.
- Connect the appliance only to a water supply with an inlet water pressure between 0.05 Mpa and 1.0 Mpa (0.5 to 10.0 bar). For higher water pressure, a pressure regulator needs to be installed. Enquire about the water pressure with the local waterworks.
- Close the water inlet tap after every use.
- Close the water inlet tap before cleaning the water inlet filter.
- The new hose-sets supplied with the appliance are to be used. Old hose-sets should not be reused.
- Do not extend the water outlet hose or replace it with another hose.
- Make sure that the water outlet hose is not bent or twisted.
- Be aware that substantial amounts of water may leak out during emergency draining.
- Ensure that the water drain is a maximum of 80 cm above the ground.
- Ensure that the water outlet hose is clipped into the retaining clips on the back of the appliance so that the curvature always remains above the waterline.
- Do not submerge the end of the hose in the pumped out water.

- If the appliance is located in a room susceptible to frost, the water in the appliance can freeze in below-zero temperatures. For this reason, drain away the leftover water if there is a risk of frost to avoid damage to the appliance.
- Never try to force open the appliance door whilst a cycle is in progress or once a cycle has ended.

Improper cleaning of the appliance can cause damage.

- Never use harsh, granular, soda, acid, solvent-based or abrasive cleaners. They can damage the surfaces or make the rubber sleeve brittle and fragile. All-purpose cleaners with a neutral pH are recommended.
- Do not use pointed, sharp or angular objects for cleaning the rubber sleeve. They can make the rubber sleeve leaky.
- Check and clean filters and gaskets regularly.
- Replace defect filters and gaskets immediately. Never operate the appliance without filters and gaskets or if the filters and gaskets are defective.
- Never spray the appliance with a water jet or a high-pressure cleaner.

Improper filling of the appliance can lead to damage.

- Make sure that there are no foreign objects in the pockets of garments in the laundry, e.g. needles, nails, coins, matches, staples, clips, etc.
- Only use dyeing or bleaching agents that are suitable for washer-dryers.
- Only use tap water for washing.
- Never try to open the appliance door with force whilst a cycle is in progress or once a cycle has ended. Only open the appliance door once it has been released automatically.
- Never open the dispensing drawer when the machine is running.
- Never dry more than 6 kg of textiles in one go. Never wash more than 8 kg textiles in one go.
- Do not cut through the inlet hose. It contains electrical components. If the inlet hose is damaged, have it repaired by a specialist (“Service” see page EN-42).

Delivery

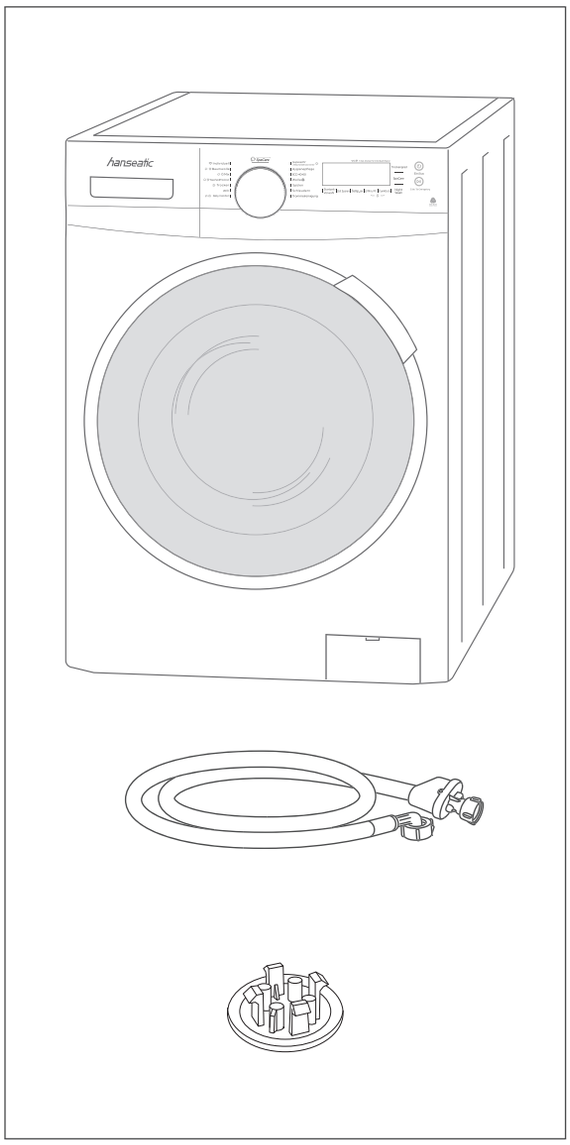

The nameplate is on the back panel of the appliance.

Package contents

1× Washer-dryer
1× Water inlet hose
4× Covers for transport safety holes
1× User manual

Check package contents

1. Move the appliance to a suitable place and unpack it (see page EN-33).
2. Remove all parts of the packaging, plastic profiles, tape and foam padding.
3. Check that the delivery is complete.
4. Check whether the appliance was damaged during transit.
5. If the delivery is incomplete or the appliance has been damaged during transport, please contact our service department (see page EN-42).

WARNING

Risk of electric shock!
Touching live parts may result in severe injury or death.
■ Never use a damaged appliance.

Operating controls and appliance parts

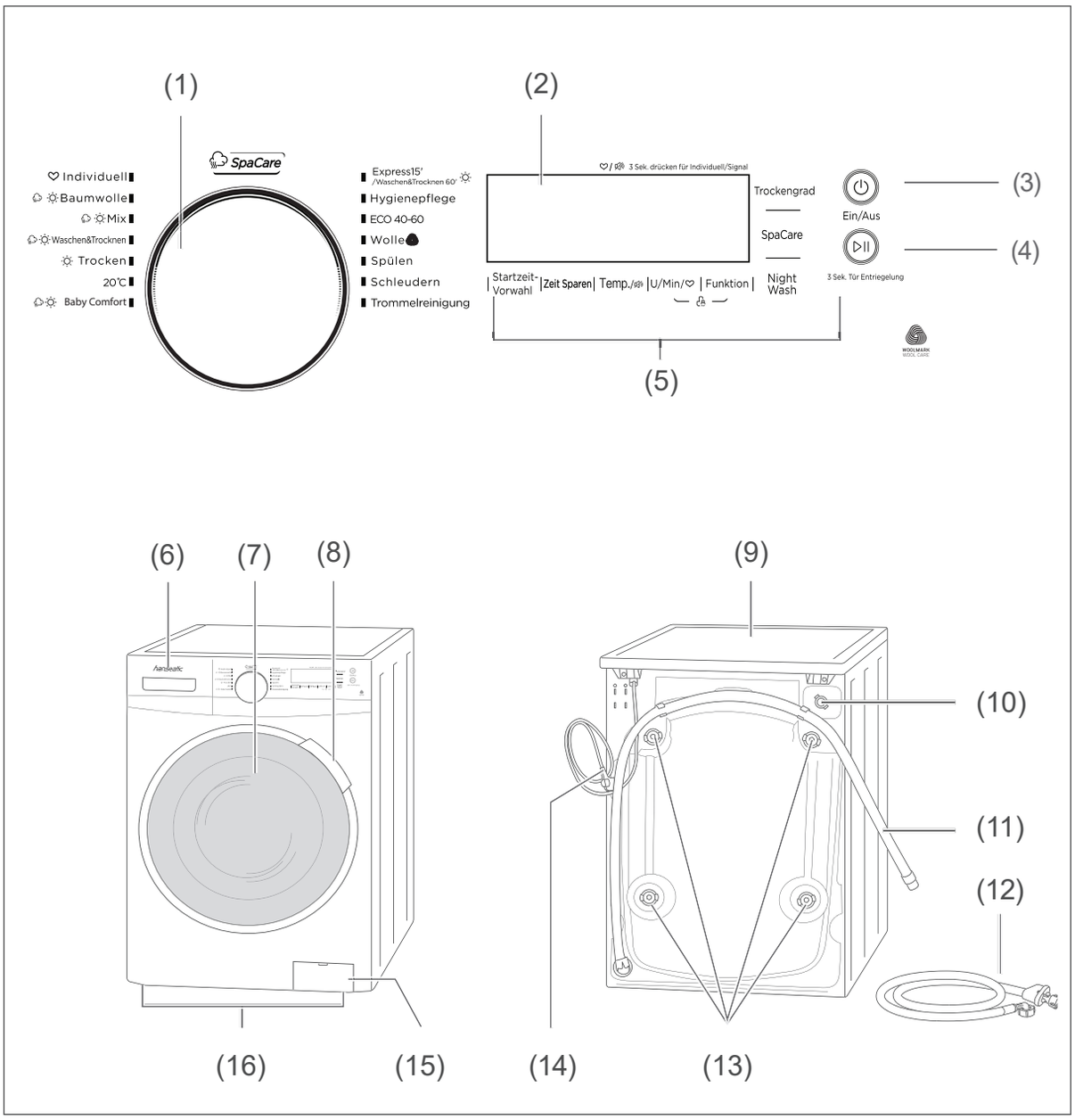

(1) Cycle selector
(2) Control panel
(3) On/Off button
(4) Start/Pause button
(5) Key for additional functions
(6) Dispensing drawer
(7) Appliance door
(8) Door handle
(9) Cover plate
(10) Connection for water inlet hose
(11) Water outlet hose
(12) Water inlet hose
(13) Transport safety devices, ×4
(14) Mains cord with mains plug
(15) Lint trap with shutter
(16) Screw-on feet, ×4 (not visible)

Control panel

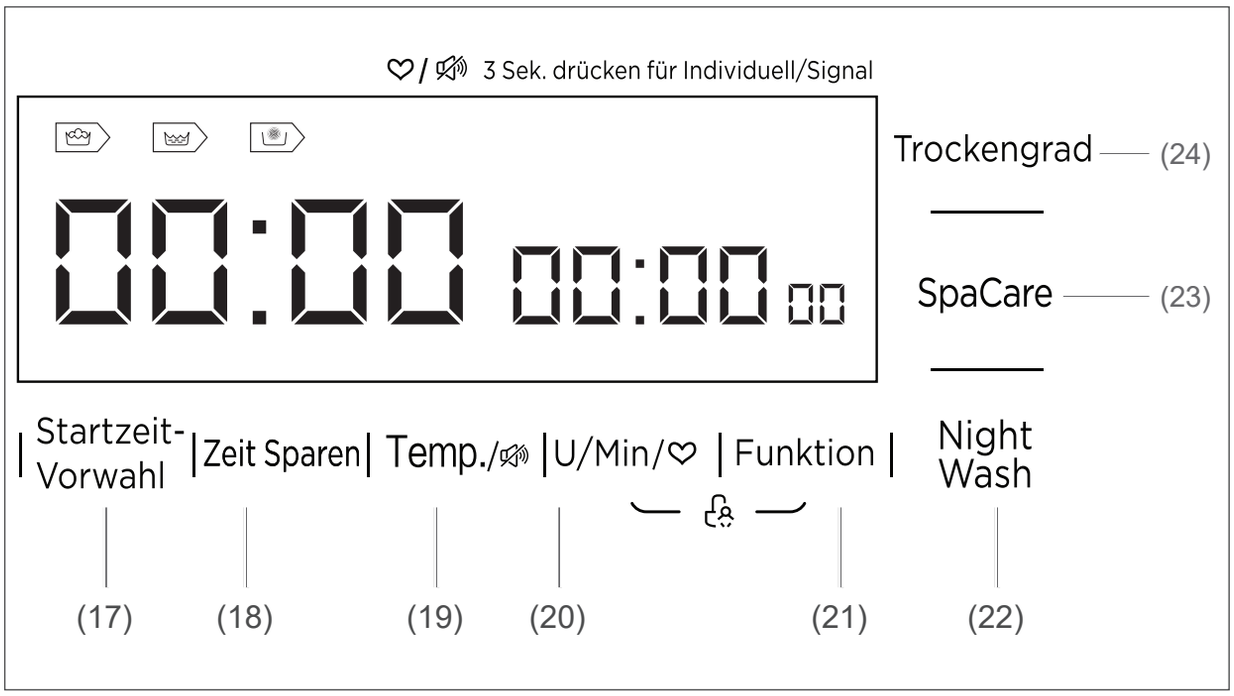

(17) Delay button

(18) Speed wash button (reduces washing time)

(19) Temp / button

(20) Spin / button

(21) Function button

(22) Night wash button

(23) Spacare button

(24) Dry button

Display symbols

	Functions
	Wash
	Rinse
	Spin
	Dry
	Spacare
	Extra rinse
	Pre wash

	Dry level
	Cupboard dry
	Extra dry
	Iron dry

	Additional functions
	Door lock
	Chld lock
	Start time delay
	Speed Wash
	Night wash to reduce noise levels

Cycle table

Cycle	Type of laundry	Nominal capacity in kg [1]	Cycle duration in hours and minutes	Standard temperature °C [2]	Energy consumption in kWh/operating cycle	Water consumption in litres/operating cycle	Residual moisture in %/ spin speed [3]
My Cycle		8	03:44	60	1,498	71	70/800
Cotton	Heavily soiled boil-wash laundry; heat-resistant cotton, linen, underwear, sheets, tablecloths, towels	8	03:44	60	1,498	71	70/800
Mixed	Cotton, synthetic and coloured laundry	8	01:20	40	0,754	71	70/800
Wash and dry [5]	Normally soiled cotton laundry, declared to be washable at 40 °C or 60 °C, can be cleaned together in the same cycle and dried so that it can be immediately stored in a cupboard.	6	09:30	27	3,798	100	3/1400
		3	07:00	24	1,987	75	3/1400
Dry	Only clothing with the appropriate care label may be dried in the dryer.	6	03:40	/	3,080	42	3/1200
20 °C	Lightly soiled laundry, e.g. cotton or linen, underwear, etc.	4	01:01	20	0,183	44	65/1000
Baby care	Programme with additional rinse cycle for laundry for babies, allergy sufferers and people with particularly sensitive skin	8	02:01	60	1,317	71	65/1000
Quick 15‘	Extra-short cycle for lightly soiled laundry (lower detergent dosage recommended)	2	00:15	/	0,030	40	70/800
1hr WD	Extra-short cycle for lightly soiled laundry (lower detergent dosage recommended)	1	00:58	/	0,790	46	3/1200
Sterilization	Removes harmful micro-organisms by maintaining a high washing temperature.	4	02:27	70	1,094	55	70/800
ECO 40–60 [4]	Energy-saving: Normally soiled cotton laundry, declared to be washable at 40 °C or 60 °C, can be cleaned together in this cycle.	8	03:38	36	0,766	61	53.9 / 1351
		4	02:48	28	0,415	45	53.9 / 1351
		2	02:48	24	0,199	36	53.9 / 1351

Table: Further options

Cycle	Type of laundry	Nominal capacity in kg [1]	Cycle duration in hours and minutes	Standard temperature °C [2]	Energy consumption in kWh/operating cycle	Water consumption in litres/operating cycle	Residual moisture in %/ spin speed [3]
Wool	Wool and delicates suitable for washing machines.	2	01:07	40	0,410	60	80/600
Rinse & Spin	Heavily soiled laundry, cycle with extended washing time	8	00:20	/	0,050	25	65/1000
Spin only	all types of laundry	8	00:12	/	0,040	/	65/1000
Drum clean		/	01:18	90	0,979	27	/

WOOLMARK
WOOL CARE

The wool wash cycle of this machine has been tested and approved by The Woolmark Company for the washing of machine washable wool products provided that the products are washed according to the instructions on the garment label and those issued by the manufacturer of this washing machine

M2306: HWDK86AD

Loading the household washer-dryer up to the capacity indicated for the respective programmes will contribute to energy and water savings.

Other than “ECO 40–60” and “Wash and dry ”, the values specified for the cycles are only guidelines. The cycle length may differ from the length given in this table, depending on the amount of laundry, the water temperature and ambient temperature, as well as any changed settings.

1) Maximum amount of dry textiles that can be treated in the respective wash cycle

2) The highest temperature reached by the laundry in the wash cycle for at least five minutes

3) Residual moisture after the wash cycle in water content percent and the spin speed at which this was achieved. The noise level and residual moisture are influenced by the spin speed: the higher the spin speed during the spin cycle, the higher the noise level and the lower the residual moisture.

4), 5) ECO 40–60 and “Wash and dry ” are used to assess the compliance with the EU ecodesign legislation. The ECO 40-60 programme is able to clean normally soiled cotton laundry declared to be washable at 40°C or 60°C, together in the same cycle. This programme is used to assess the compliance with the regulation (EU) 2019/2023

5) The Wash and Dry programme with the dry level setting “Extra Dry” can clean normally soiled cotton laundry declared washable at 40°C or 60°C in the same cycle, and dry it in such a way that it can be immediately stored in a cupboard. This programme is used to assess compliance with the regulations (EU) 2019/2023, (EU) 2021/340, and (EU) 2021/341.

The table shows which cycle offers which options for adjustment. If an adjustment is not possible for a cycle, the signal will flash in the display.

Cycle	Default temperature in °C	Default spin speed in rpm[1]	Additional functions
Cotton	40	800	
Mixed	40	800	
Wash and dry	–	1400	
Dry	–	1200	
20 °C	20	1000	
Baby care	60	1000	
Spin	–	1000	
Spin & Rinse	–	1000	
Drum clean	90	–	
Wool	40	600	
ECO 40–60	–	1400	
Sterilization	70	800	
Quick 15‘	cold	800	
Washing & drying 60‘	–	1200	

[1] “–” means that no spin cycle is performed in this program.

Selecting the cycle

NOTICE

Always select the cycle before loading the washer-dryer. Otherwise the loading sensor will not work.

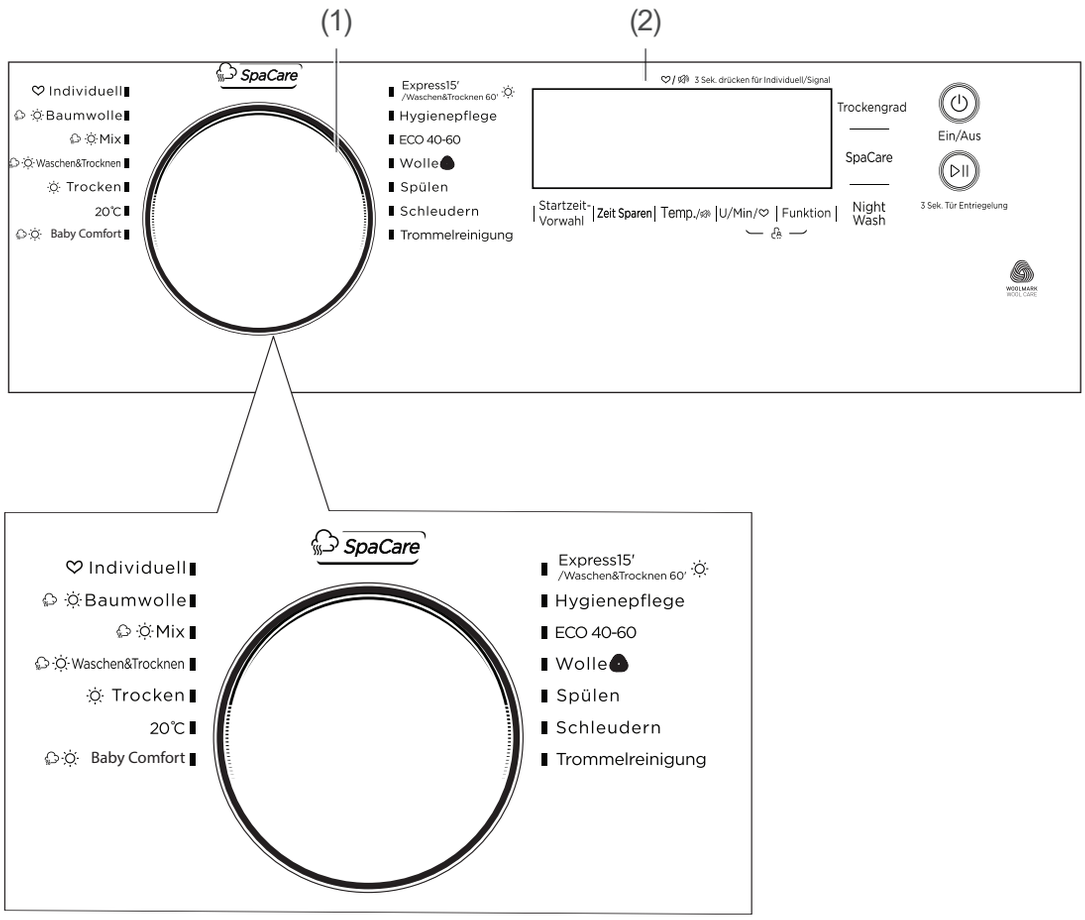

- Choose the correct cycle for your laundry from the cycle table on page page EN-15 and select it using the cycle selector (1).
- You can customise the selected cycle to suit your laundry by adjusting the default settings using the control panel (2) (see “Table: Further options” on page EN-16).

NOTICE

Please note that the maximum amount of laundry will reduce if you select a drying cycle as well as a washing cycle.

Loading the washer-dryer

Loading laundry

NOTICE

Risk of fire/damage!
Improper handling of the appliance can lead to fire/faults.

- Do not dry any unwashed laundry in the appliance.
- Items such as foam rubber (latex foam rubber), shower caps, waterproof fabrics, rubberised objects or clothes, or pillows with shredded foam rubber should not be dried in the appliance.
- When selecting a washing/drying cycle or just a drying cycle, do not place items including dosing balls or similar in the drum.
- Never try to open the appliance door with force whilst a cycle is in progress or once a cycle has ended. Only open the appliance door once it has been released automatically.

1. Open the appliance door by pulling the handle slightly forward.
2. Load the laundry. Pay attention to the tips on page EN-25.
   Do not exceed the maximum load weight allowed and do not wedge clothes between the appliance door and rubber sleeve.
3. Push the appliance door closed until you hear it snap shut.

Dispensing washing detergent/fabric-care products

- Pull out the dispensing drawer (6) and fill the compartments as follows before the cycle starts:

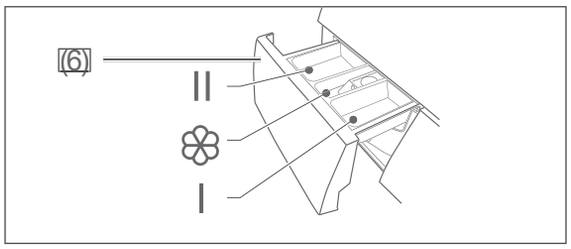

Dispensing compartment II (left)

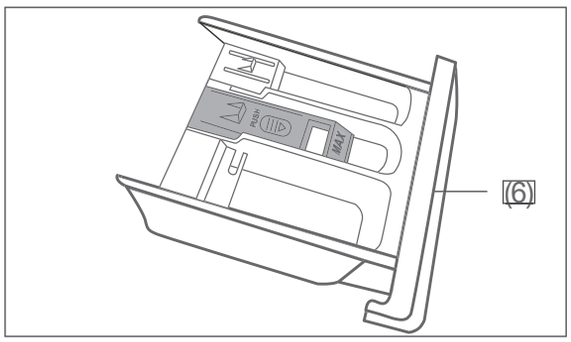

– Dispensing compartment II is intended for the main wash. Fill it with powder or liquid detergent or anti-limescale agent for every wash.

Fabric softener/starch compartment ❁ (centre)

– Dispense fabric softener or laundry starch here according to the information supplied by the manufacturer.

Dispensing compartment I (right)

– Dispensing compartment I is only intended for prewashes. Only fill it if you select a cycle with a prewash cycle ⊔.
  We recommend only using cycles with a prewash cycle for very heavily soiled clothing.
  If you select a cycle with pre-wash, fill detergent compartment I with ¼ of the detergent and fill detergent compartment II with ¾ of the detergent.

- Push the detergent drawer back in after filling.

Cycle	I	II	❀
Cotton	○	●	○
Mixed	○	●	○
Washing & drying		●	○
Dry			
20 °C		●	○
Baby care	○	●	○
Drum clean			
Spin			
Spin & Rinse			○
Wool		●	○
ECO 40–60		●	○
Sterilization		●	○
Express 15‘		●	○
1h WD		●	○

● mandatory

○ optional

Washing/drying process

Before getting started

– Read the chapter “Safety” from page EN-4.
– Prepare the appliance as described in chapter “Set-up and connection” from page EN-33.
– Properly secure the water outlet hose (11) and the water inlet hose (12).

Starting the cycle

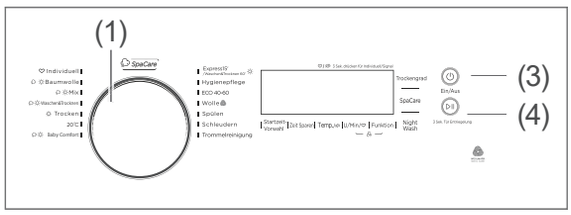

1. Load the laundry (see “Loading laundry” on page EN-19).
2. Press the ⏻ button (3) to switch the appliance on.
3. Open the valve completely.
4. Select the desired cycle using the cycle selector (1).
5. Make changes if necessary:
   – To adjust the **temperature**, press the “Temperature” button (19) repeatedly until the desired value is shown in the display (5).
   Depending on the cycle you can set a temperature of 20 °C, 30 °C, 40 °C, 60 °C or 90 °C. If -- is displayed, the laundry is being washed cold.
   – To adjust the **spin speed**, press the “Spin” button (20) repeatedly until the desired value is shown.
   Depending on the cycle, you can set a spin speed of 0, 400, 600, 800, 1000, 1200 or 1400. If no spin speed is displayed, no spin cycle will take place.
   – To adjust the **dryness level**, press the “Dryness level” button (24) repeatedly until the desired value is shown in the display.
   – To set one or several additional **functions**, press the “Functions” button (21) until the desired function is marked.
6. Press the ▶|| button (4).
   – The cycle starts.
   – The appliance door is locked, the display shows the signal 🔒.
   – The remaining cycle time is displayed.
   – After the cycle starts, the settings can no longer be changed. If you want to interrupt or change a cycle, see ”Cancelling/modifying a cycle” on page EN-22.

ℹ If you have selected a cycle with drying function, the spin speed and the cycle duration will be automatically set up to improve the drying effect.

Adding laundry

! NOTICE

Risk of damage!
Improper handling of the appliance can lead to water damage.
- Never open the appliance door when the water level is high.
- Never open the appliance door with force.
- Do not add laundry at high temperatures or if the water level reaches over the edge of the inner tub.

You can interrupt the cycle during a wash cycle and add laundry.

1. Press the ▶|| button (4) for three seconds to pause the current cycle and add laundry.
2. Depending on the cycle’s progress, the appliance door will either be released with a click or remain locked:
   – The appliance door will remain closed if the water level is too high. The appliance

will pump the suds out so that the appliance door can be released.

3. Open the appliance door, add laundry and then close the appliance door.
4. Press the ▶|| button (4) in order to continue the cycle.

Cancelling/modifying a cycle

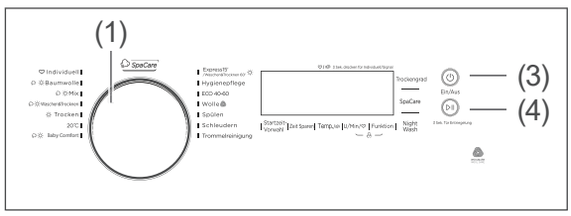

1. Press the ⏻ button (3) to cancel or modify an active cycle.
   The washer-dryer will switch off.
2. Press the ⏻ button (3) again in order to switch the washer-dryer back on.
3. Use the cycle selector (1) to select any cycle and then add detergent if required.
4. Start the new cycle with the ▶|| button (4).

Cycle end

The appliance stops automatically as soon as the selected cycle is finished.

You will hear a signal tone and the display (5) will show End.

When the locking time ends, the signal 🔒 will go out.

The appliance door will be released with a click and you can remove the laundry.

1. Leave the appliance door open between cycles and pull the dispensing drawer (6) out slightly to allow the inside of the appliance to dry.
   If no further settings are made, the appliance will automatically switch off after 10 minutes.
2. Press the ⏻ button (3) to switch off the appliance.
3. Turn off the valve and take the mains plug out of the socket.

The spin speed affects the noise emissions of the appliance and the residual dampness of the laundry. The higher the spin speed, the higher the noise emissions and the lower the residual dampness.

Additional functions

You can set additional functions if required before starting the programme.

– To activate the desired auxiliary function, touch the corresponding button (17) to (20) and (23) to (24) on the control panel.
– To activate additional functions, touch the function button (21) repeatedly until the symbol of the desired additional function is illuminated on the control panel.

If the auxiliary function symbol is continuously lit, the selected auxiliary function is activated.

If the auxiliary function symbol flashes, the selected auxiliary function is not activated.

Reason for not enabling the feature:

– The auxiliary function may not be available with the selected washing programme.
– The appliance may have exceeded the time window for enabling the auxiliary function.
– The auxiliary function may not be compatible with any of the previously selected auxiliary functions.

Customised settings ♡

Your appliance's cycle selection includes a "Custom" cycle. The Cotton cycle is configured as standard here. But you can also store a custom cycle that you have adjusted and would like to use frequently.

1. Select the cycle that you wish to save.
2. Press and hold the U/Min ♡ button (20) for approx. 3 seconds before you start the cycle.

Starting custom cycle

- You can select the custom cycle ("Custom") using the cycle selector (1) and start as normal.

Start time pre-selection

The cycle usually starts as soon as you have pressed the ▶|| button (4).

The appliance offers two ways to delay the start of the cycle. The start time delay can be set in one-hour increments. The maximum start time pre-selection is 24 hours.

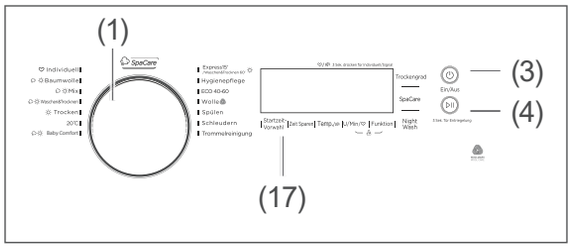

1. Select the desired cycle using the cycle selector (1).
2. Press the "Start time pre-selection" button (17) until the desired start time is set.
3. Press the ▶|| button (4)
   The cycle will start automatically after the set start delay period has finished.

If you wish to stop the start time pre-selection, press the start time pre-selection button (17), until the display (5) shows 0 hours.
If the cycle already started, press the ⏻ button (3) to switch off the device. Switch on again and set the desired programme..

Speed wash

"Speed wash" is recommended for lightly soiled laundry. The appliance will wash the laundry in a very short time.

- Press the button speed wash (18). The symbol lights up in the display.

Child lock

The child lock allows you to secure the appliance against unwanted activation of the buttons.

The child lock can be activated only once a cycle has been started.

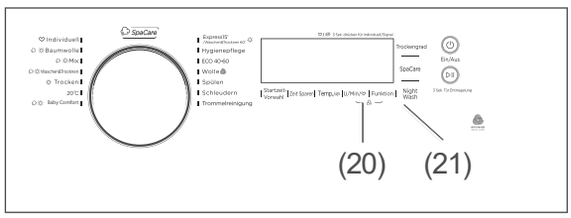

- To activate the child lock, simultaneously hold both “Functions” (21) and “U/Min ♡“ (20) buttons until the signal appears in the display.
  The operating elements are thereby locked and each time a button is pressed or the cycle selector is turned, two signal tones will sound.
- To deactivate the child lock, simultaneously hold both the “Function” and “U/Min ♡ ” buttons until the signal again goes out in the display.

Signal tones

The appliance emits signal tones as standard, e.g. when a button is pressed, when the cycle selector is turned, when there is a fault message, or at the end of a cycle.

- To deactivate the signal tones, hold down the Temp (19) button for approx. 3 seconds.
- To activate the signal tones, hold down the Temp button for approx. 3 seconds.

Night wash

This function serves to reduce noise level.

Night wash limits the spin speed to 800 rpm. In addition, the buttons are muted and there is no end sound when the wash programme is complete.

Spacare

SpaCare can be added before main wash. It generates warm steam for sterilization and achieves better washing performance especially for cold wash.

– To activate Spacare, press the Spacare button (23).

Function button

Optionally, you can select an additional function for a selected washing programme.

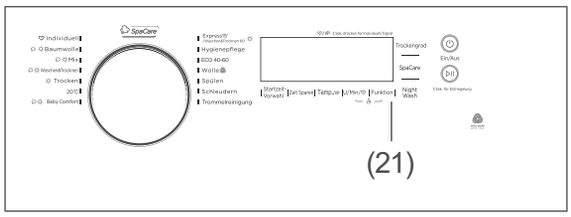

– To activate the desired auxiliary function, touch the function button (21) until the symbol of the desired auxiliary function is displayed.

If the auxiliary function icon is not displayed, this means that the auxiliary function is not available for the selected washing programme.

Extra-rinse

“Extra-rinse” is recommended for sensitive skin. The appliance will wash with more water and includes an additional rinse cycle.

Pre-wash

“Pre-wash” is recommended for heavily soiled laundry.

If you select a cycle with pre-wash, fill detergent compartment I with ¼ of the detergent and fill detergent compartment II with ¾ of the detergent.

Tips for washing and drying

Remove tissues and foreign objects such as needles, nails, coins, matches, paper clips, clips or similar from your pockets. Turn the pockets inside out if necessary and brush them out.

Sorting through laundry

The washing instructions of the textile manufacturer/the international care signals on the labels contain precise information about how to handle each piece of laundry.

We recommend sorting through the laundry according to the following criteria:

- Type of fabric
  - Hot wash/coloured wash (cotton)
  - Easy-care synthetics
  - Delicates, wool and hand wash
- Colour
  - Wash white laundry separately, otherwise it will turn grey.
  - Wash new dark pieces separately at first, as they lose their colour a lot the first few times they are washed.
- Level of dirtiness
  - If possible, remove stains when still fresh, otherwise they will become particularly stubborn.
  - It is best to pre-treat stains with water and ox-gall soap.

As fabrics need different lengths of time to dry and react to heat in different ways, additional criteria applies for drying in the appliance:

Before drying, sort the laundry to remove items that are unsuitable for drying:

- Wool textiles, silk, nylon tights, laundry with (foam-) rubber or metal parts, waterproof textiles, reinforced clothing or similar.
- laundry that has been previously treated with chemical detergents.
- laundry that has been treated with chemicals, solvents, oil, grease and wax or has been soiled with these substances prior to this wash cycle.

Sort by fabric type:

- cottons and linen textiles suitable for dryers
- delicate laundry that is suitable for dryers such as easy-care synthetics, synthetic-mix fabrics, cotton or similar.

Sort the laundry according to the instructions on the respective textile labels. Only clothing with the appropriate care label may be dried in the dryer:

Suitable for the dryer

Dry at normal temperature

Dry at lower temperature

Do not dry using the dryer

Special materials

- Small and delicate pieces, such as baby socks, stockings and underwire bras are best washed in a small pillowcase or small washbag.
- Curtains need to be handled especially carefully, as their threads can pull quickly. Only spin curtains if the textile label indicates that they are suitable for this.
- Before washing curtains, you will need to remove the plastic and metal hooks.
- Dry delicate laundry in a washing bag or net so that they are not damaged by buttons etc.
- Do not “over-dry” easy-care synthetics and synthetic-mix fabrics. Remove this laundry from the drum when slightly damp and then let it dry.

Other tips

- Repair unstitched seams and tears before washing. Sew loose buttons tight. Close zips. Knot the ties on aprons, etc.
- Turn clothing made from delicate fibres and coloured laundry inside out to protect the surface.
- Always dry small items of laundry, such as baby socks, together with a large item of laundry, such as a towel.

Protecting the environment

- The most efficient cycles with regard to energy and water consumption are generally those with a longer duration and lower temperatures.
- The ECO 40–60, 20 °C and “Wash and dry” cycles are efficient in terms of combined energy and water consumption:
  - The ECO 40–60 cycle is suitable for cleaning normally soiled cotton laundry that is declared to be washable at 40 °C or 60 °C and that can be washed together.
  - The 20 °C cycle is suitable for cleaning lightly soiled cotton laundry that can be washed at a nominal temperature of 20 °C.
  - The “Wash and dry” cycle can be used to clean normally soiled cotton laundry, declared to be washable at 40 °C or 60 °C, together and dried so that it can be immediately stored in a cupboard.
- If you adhere to the instructions concerning the maximum amount of laundry load, you can save energy and water.

Amount of laundry

The amount of laundry that can be put in depends on the type and dirtiness of your laundry and the respective wash cycle. You can find out what the maximum amount of laundry is in the cycle table on page EN-15.

As a rule of thumb: Load dry laundry up to one hand width below the upper edge of the drum.

If you overfill the drum, it may affect the outcome of your wash. It is best to weigh your washing before you do the wash. Some washing weights can be found in the following table:

Typical washing weights		
Bed sheets	Approx.	550 g
Duvet covers	Approx.	700 g
Cushion covers	Approx.	180 g
Tablecloths	Approx.	250 g
Terry towels	Approx.	200 g
Tea towels	Approx.	90 g
Men’s shirts	Approx.	250 g
Women’s nighties	Approx.	180 g
Pyjamas	Approx.	450 g
Bathrobes	Approx.	1200 g
Work overalls (synthetic)	Approx.	300 g
Handkerchiefs	Approx.	20 g

Suitable laundry and dosage

Washing detergent

- Only use detergent suitable for washing machines. Other cleaning products, such as scouring powder, household cleaning agents, etc. will damage the appliance and your laundry.
- Do not use liquid detergent in the pre-wash cycle.

Dosage

The motto “more is better” does not apply to detergents and fabric-care products. They must be dosed properly to achieve the perfect wash result.

- If necessary, use a smaller dosage of detergents and fabric-care products if the drum is not filled completely. For example, for half loads, only use about half the amount needed for a full drum.
- Always adjust the amount of detergent to the hardness of the water. If your tap water is soft, you need less detergent.
  Information about the water hardness in your area is provided by the waterworks responsible. The water hardness is also shown on the invoice from your water supplier.
- Dose detergent according to how dirty your laundry is. Laundry that is less dirty requires less detergent.
- Highly concentrated detergent (also known as compact detergent) in particular requires accurate dosages. Even small deviances can have a major impact when it comes to this.

The following wash results are a sign of incorrect dosage of detergent:

- Too much detergent
  - Heavy foam formation
  - Poor washing and rinsing result
  - Skin irritation caused by leftover detergent in the clothing
- Not enough detergent
  - Laundry turns grey
  - Grease marks (grey clumps of grease and dirt on laundry)
  - Build-up of limescale deposits on the drum, heating elements and/or laundry

Fabric-care products

- Do not use fabric softener in the same wash cycle as starch, fabric conditioner, or finishes.
- Before dispensing viscous fabric-care products, mix them together with a little water to thin them out.
- Only use powder starch according to the instructions on the packet and not with high temperatures, or it may form clumps.

Recommendations for washing detergent			
Recommended washing detergent	Wash cycles	Washing temperature in °C	Type of laundry and textile
Heavy-duty detergent with bleaching agents and optical brighteners	Cotton, ECO 40–60, Mix	20, 30, 40, 60	White laundry comprising boil-proof cotton or boil-proof linen
Colour detergent without bleaching agents and optical brighteners	Cotton, ECO 40–60, Mix, 20 °C	Cold, 20, 30, 40	Coloured laundry made from cotton or linen
Colour or mild detergent without optical brighteners	20 °C	Cold, 20	Coloured laundry made from easy-care fibres or synthetic material
Special wool detergent	Wool	Cold, 20, 30, 40	Wool

Care and maintenance

WARNING

Risk of electric shock!
Touching live parts may result in severe injury or death.

- Before cleaning and maintenance of the appliance, unplug the mains plug from the socket or isolate/unscrew the fuse.
- Always touch the mains plug, never the mains cord.
- Never spray the device with a water jet or a high-pressure cleaner. Water could reach live components through cracks.

NOTICE

Risk of damage!
Improper cleaning and maintenance of the appliance can lead to damage. The surface of the appliance can scratch and the rubber sleeve can become brittle, fragile and leaky.

- Never use harsh, granular, soda, acid, solvent-based or abrasive cleaners. They can damage the surfaces or make the rubber sleeve brittle and fragile. All-purpose cleaners with a neutral pH are recommended.
- Do not use pointed, sharp or angular objects for cleaning the rubber sleeve. They can make the rubber sleeve leaky.

Regular checks

- Check regularly if
  - the fittings of the water inlet hose (12) are sitting securely and are sealed when the valve is open.
  - the water outlet hose (11) is attached securely to the edge of the bath or the siphon.
  - the water outlet hose is clamped tightly in the retaining clip at the point where it comes out of the housing.
  - the hoses are in good condition (not brittle, cracked or kinked).
  - the lint trap (15) is closed tightly.
  - the rubber sleeve of the appliance door (7) is free of foreign objects such as buttons, paper clips, etc.
  - the drum is free of foreign objects.
  - the drum is free of traces of rust.

Regular cleaning

Washing machine-cleaning agents for maintaining your appliance can be found in well-stocked supermarkets and drugstores. Cleaning the appliance using these products takes place when the washing machine is empty and is very intensive.

You should clean the appliance in this way every 30 wash cycles to prevent limescale deposits and to maintain your appliance. When doing so, please note the manufacturer instructions on the packaging.

Limescale deposits can be avoided using the right detergent dosage (see “Dosage” on page EN-27).

Cleaning the appliance door

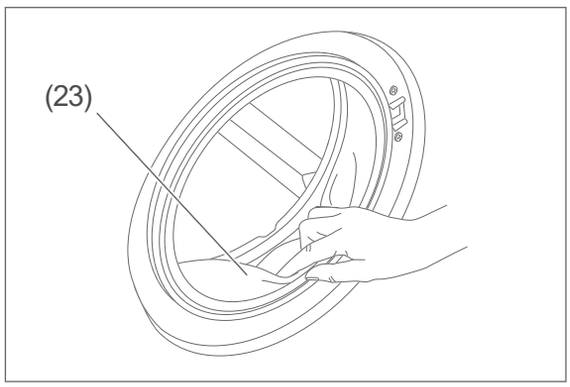

1. Pull back the folds of the rubber sleeve (23) carefully and remove all objects from behind it.
2. Wipe the appliance door (7) and rubber sleeve with a soft and damp cloth on the outside and inside, and then wipe them both dry.

Cleaning the drum

1. After use, wipe the drum when damp to remove starch or fabric conditioner.
2. Leave the appliance door open so that the moisture can evaporate from the interior.

Cleaning the dispensing drawer

1. Pull the dispensing drawer (6) out as far as possible.

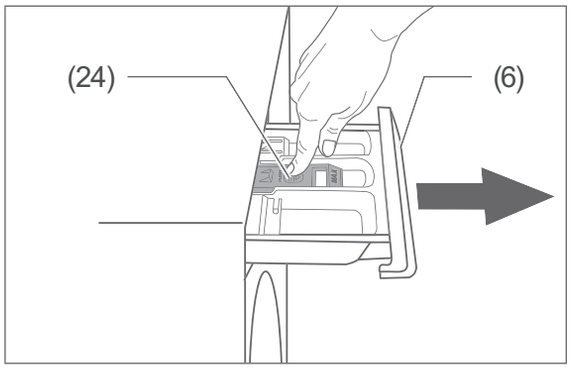

2. Press the release spot (24) and pull the dispensing drawer out completely.

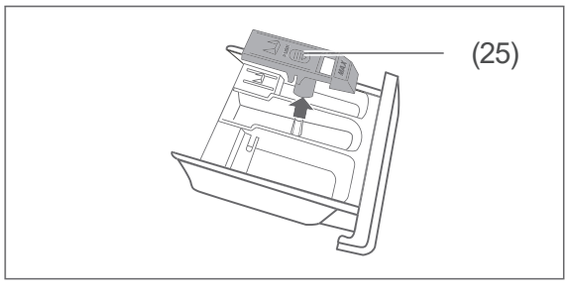

3. Remove the insert (25).
4. Rinse the dispensing drawer and insert under running water.
5. Remove any leftover detergent in the drawer runner and compartments with a small brush for dishes or bottles or a toothbrush.

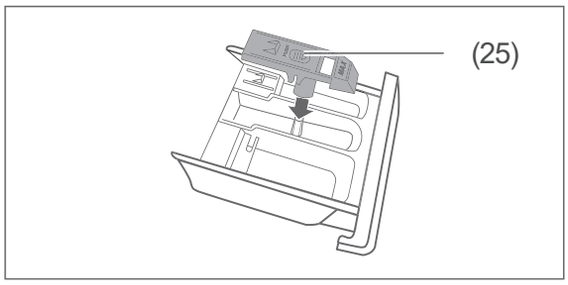

6. Reinsert the insert (25).
7. Push the dispensing drawer back into the machine.

Checking and cleaning the filters

! NOTICE

Risk of damage to property!
Improper handling of the appliance can lead to water damage or damage to the appliance.

- Turn off the water inlet tap after each use, before cleaning the water inlet filter or before replacing the seal. Otherwise there is a risk of water damage.
- Close the valve before cleaning the filter or replacing the gaskets.
- Check and clean filters and gaskets regularly.
- Replace defect filters and gaskets immediately. Never operate the appliance without filters and gaskets.

In the water inlet, the appliance contains filters that prevent foreign particles from penetrating the appliance.

Check and clean the filters every 30 wash cycles or if the appliance is not getting enough water despite the tap being open completely.

1. Switch off the appliance.
2. Take the mains plug out of the socket and turn off the tap.
3. Unscrew the water inlet hose (12) from the valve.

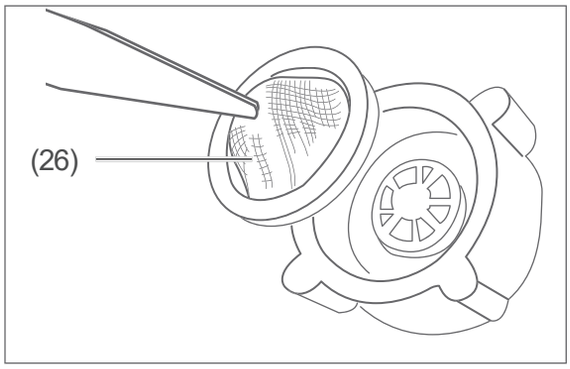

4. Pull the filter (26) out of the union nut, e.g. with tweezers or a pair of pliers.
5. Rinse the filter under fresh water and clean with a small, soft brush.
6. Re-insert the filter.
7. Screw the water inlet hose (12) onto the valve again.

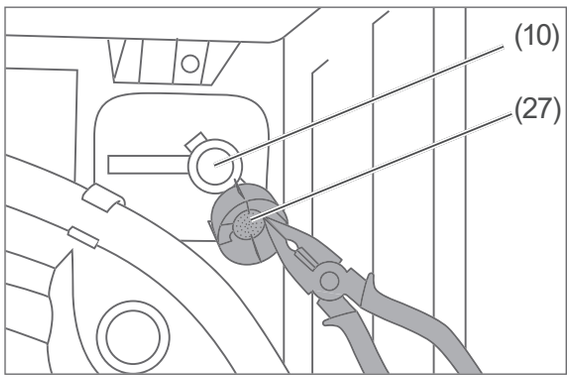

8. Unscrew the water inlet hose from the appliance.
9. Use pliers to remove the filter (27) from the inlet hose connecting nozzle (10).
10. Rinse the filter under fresh water and clean with a small, soft brush.
11. Re-insert the filter and screw the water inlet hose back onto the connecting nozzles.
12. Open the valve to check whether the water inlet hose and connections are sealed.

Cleaning the lint trap

⚠ CAUTION

Risk of scalding!
Improper handling of the appliance can lead to scalding caused by hot suds.

- Leave the suds to cool before draining them.

! NOTICE

Risk of damage!
If the emergency/residual water is emptied, a quantity of water will flow out.

- Use an adequately large collection container.

The lint trap stops threads and other foreign bodies ending up in the pump with the suds. Clean the lint trap every 30 wash cycles.

1. Switch off the appliance.
2. Close the valve.

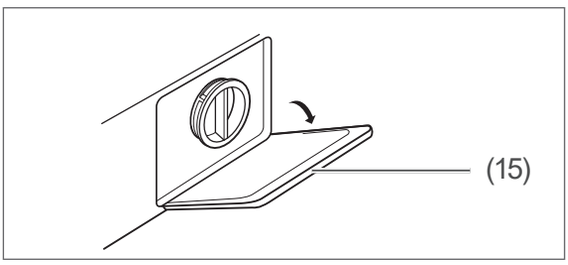

3. Open the shutter of the lint trap (15) with a flat object.

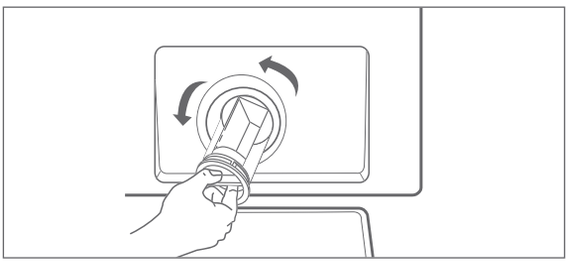

4. Lock the lint trap in place by turning it anticlockwise.

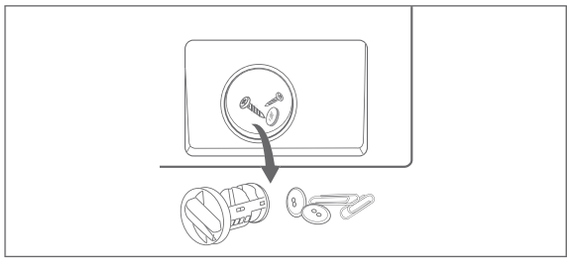

5. Remove the foreign body and clean the lint trap thoroughly under running water.

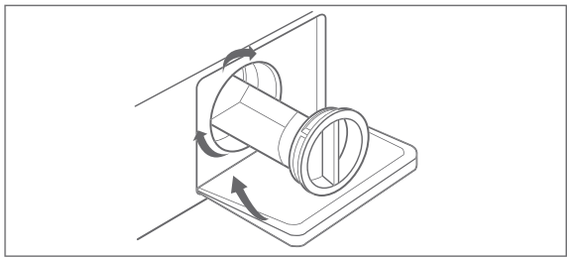

6. Replace the lint trap and turn it clockwise until it clicks into place.
7. Insert the shutter (15) in such a way that the opening is pointing upwards and press it firmly.

Emptying residual water

⚠ CAUTION

Risk of injury!
Improper handling of the appliance may result in injury.

- The appliance is very heavy. Never carry it alone, but always have at least two persons to do so.

If the appliance is in a frost-prone room, you must drain the residual water so that it does not freeze in the appliance and cause damage.

1. Follow steps 1 to 5 as described in the chapter “Cleaning the lint trap” on page EN-31.

2. With the assistance of another person, tilt the appliance forward slightly to allow any residual water to drain from the appliance.
3. Replace the lint trap and screw it clockwise all the way in.
4. Put the shutter (15) back into position. Make sure that the rectangular opening in the cover is at the top.
5. Unscrew the water inlet hose (12) from the tap and remove the water outlet hose from the bathtub or siphon to drain any residual water.

Set-up and connection

Any residual water or water drops present in the machine are merely a sign that the appliance was tested for functionality during production.

Transport

CAUTION

Risk of injury!
Improper handling of the appliance may result in injury.

- The appliance is very heavy. Never transport or carry it alone, rather always with at least two persons.

NOTICE

Risk of damage!
Improper handling of the appliance may result in damage.

- If a trolley is used to move the appliance, always lift the appliance as shown on the packaging.
- Always transport the appliance vertically.
- Only transport the appliance with built-in transport safety devices.

- Check whether the paths of transport and the installation location are suitable for the weight of the appliance. If in doubt, ask your landlord or property management.

Removing/installing transport safety devices

WARNING

Risk of electric shock!
Touching live parts may result in severe injury or death.

- Make sure the appliance is not connected to the power supply whilst the transport safety devices are being removed or installed.

NOTICE

Risk of damage!
Improper installation and set-up of the appliance may result in damage.

- Remove all transport safety devices prior to installation.

Removing the transport safety devices

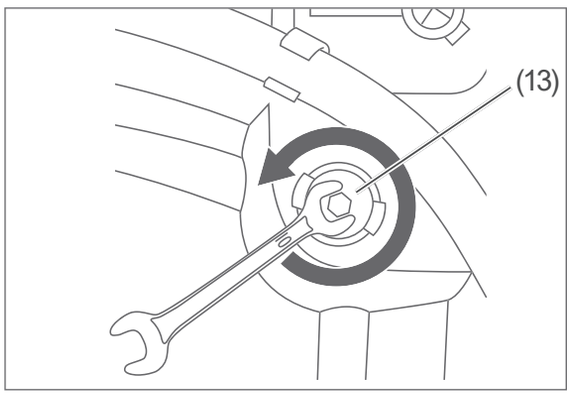

1. Loosen the screws of the four transport safety devices (13) using a 10 mm wrench.

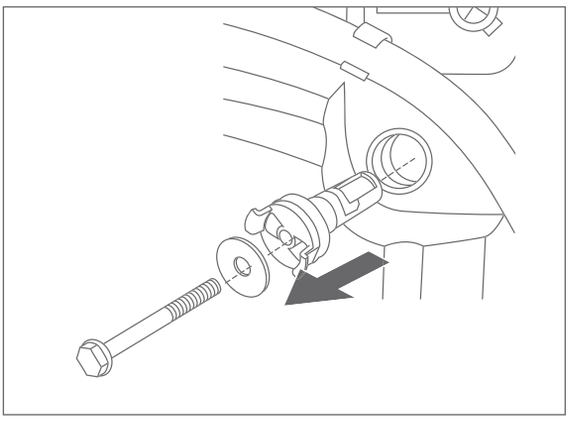

2. Remove the transport safety devices and keep them safe so that you can use them for another transportation.

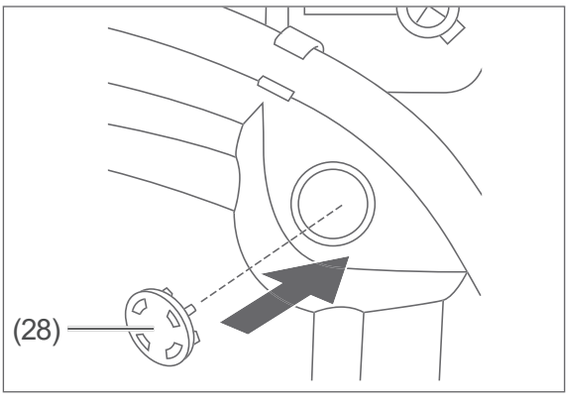

3. Close off the transport safety holes with the enclosed covers (28).

Installing the transport safety devices

- Reinsert the transport safety devices (13) before each transportation Washer-dryer. For this purpose, follow the steps described above in the reverse sequence.

Setting up the appliance

– Place the appliance in a frost-proof, well-ventilated room.
– Place the appliance far away from heaters that burn oil or coal.
– Set up the appliance in a place where there is a bathtub or sink.
– Set up the appliance so that the mains plug is easily accessible, even after the appliance has been set up.
– Set up the appliance on a firm, flat, clean, and dry surface.
– Do not place the appliance on a carpet or rug. The appliance will then not be sufficiently ventilated, and may overheat.
– Place a sturdy wooden panel (at least 60 × 60 cm, 3 cm thick), under the appliance if you are installing it on parquet or a wooden beam floor.
– Rubber mats are not suitable and must not be used.
– Position the appliance so that it is at least 2 cm away from side walls and the rear wall.
– The appliance feet must not be removed.
– When placing it on a base or other elevation, appropriate measures must be taken to protect the appliance from falling. These measures must not damage the appliance.

Aligning the appliance

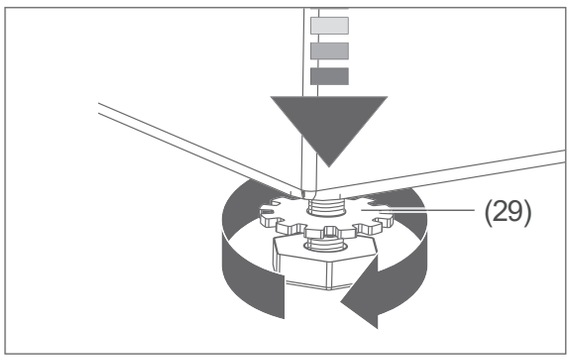

1. Manually screw or unscrew each foot until the washing machine is horizontally aligned.
2. Twist the lock nuts (29) of all screw-on feet upwards to the underside of the appliance and tighten the lock nut against the underside of the appliance.

Water connection

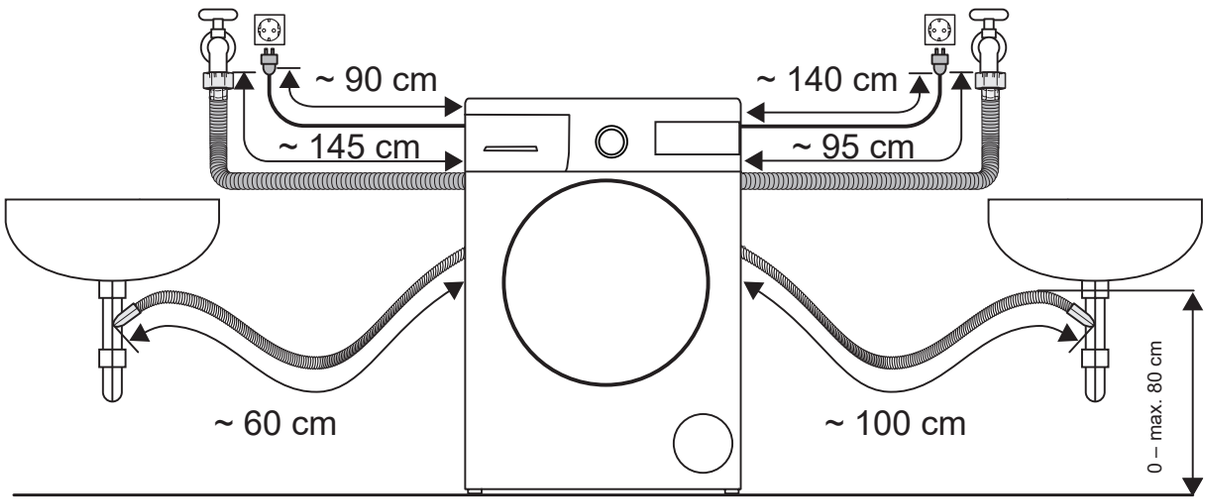

Creating a water drain

⚠ CAUTION

Risk of scalding!
The suds can become very hot and may cause burns upon contact.

- Fix the water outlet hose to the sink or bath to prevent it from slipping due to the recoil caused by pumping.
- For drains, make sure that the cross section of the discharge pipe is great enough that the drain cannot overflow.

! NOTICE

Risk of damage!
Improper handling of the appliance can lead to water damage.

- Do not extend the water outlet hose or replace it with another hose.
- Make sure that the water outlet hose is not bent or twisted.
- Make sure that the curvature of the water outlet hose is at least 60 cm (max. 100 cm) above the ground to ensure the water drain functions perfectly.
- Ensure that the water outlet hose is in the retaining clips on the back of the appliance so that the curvature always remains above the waterline.
- Make sure that the end of the hose is not submerged in the pumped water.

The water outlet hose (11) can be fixed in two ways:

– Fixing with a hose holder for self-installation.
– Fixing to an appliance connection nozzle directly on the siphon by a specialist.

Fixing with a hose holder

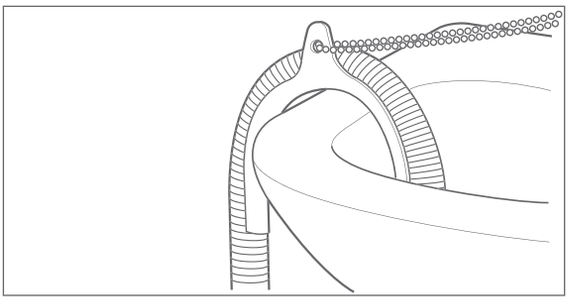

- Put the end of the water outlet hose (11) over a hose holder (not included in package contents) and hang it over the edge of a bath.
  You can find a hose holder in a specialist shop or DIY store.

Fixing to an appliance connecting nozzle

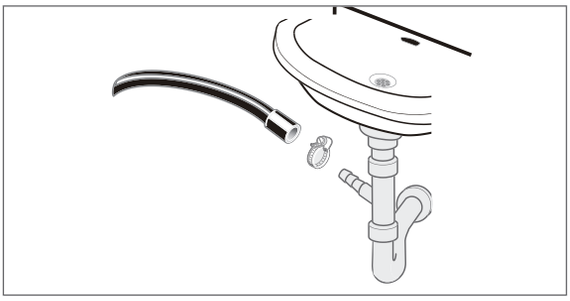

Have a specialist carry out the process of fixing to an appliance connecting nozzle directly on the siphon.

An unused appliance connecting nozzle contains a washer to prevent water flowing out. This washer must be replaced by a seal ring before connecting the water outlet hose.

Creating a water inlet

NOTICE

Risk of damage!
Improper handling of the appliance may result in damage.

- Only use the hose delivered with the appliance to connect to the water supply. Never use old hoses.
- Do not connect the appliance to the hot water supply.
- Connect the appliance only to a water supply with an inlet water pressure between 0.05 Mpa and 1.0 Mpa (0.5 to 10.0 bar). For higher water pressure, a pressure regulator needs to be installed. Enquire about the water pressure with the water authority.
- Do not use a pipe wrench to screw down the union nuts on the valve. This can damage the union nuts.
- Lay the inlet hose without kinks and connect it carefully.

Make sure that the appliance is connected to a water supply with a safety device that prevents drinking water from being contaminated by backflow (according to DIN EN 1717). Connection valves intended for this purpose must be installed in a suitable place in a correctly installed drinking water system in the house. If you are unsure, consult a qualified professional.

For the water supply, you will need a valve with a 3/4 inch screw connection.

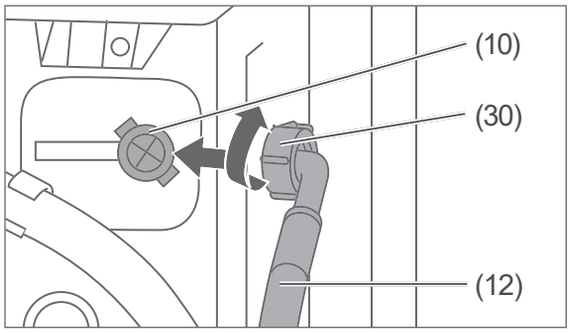

1. Screw the water inlet hose (12) onto the connecting nozzles by hand (10). To do so, turn the union nut (30) clockwise.

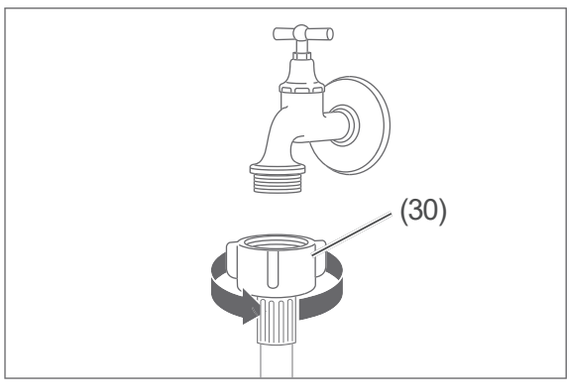

2. Secure the other end on the water inlet hose to the tap by hand. To do so, turn the union nut (30) clockwise.
3. Open the valve completely and check whether the connections on the appliance and on the valve are sealed.
4. Then close the valve again.

Creating an electrical connection

⚠ WARNING

Risk of electric shock!
Touching live parts may result in severe injury or death.

- If the supply cord is damaged, it must be replaced by the manufacturer, its service agent or similarly qualified persons in order to avoid a hazard.
- Do not operate the appliance with an external timer or a separate remote control system.

⚠ CAUTION

Fire hazard!
Improper handling of the appliance can lead to fire and property damage.

- Only connect the appliance to a properly installed and earthed electric socket. Do not connect to a multi-socket extension cable or a multi-socket plug.

- Plug the mains plug into a properly installed and earthed electric socket that has been sufficiently secured (see “Technical specifications” on page EN-45).

Calibration

1. Make sure that the drum is empty and that the appliance door (7) is closed.
2. Switch the appliance on by pressing the On/Off button.
3. Within the following 10 seconds: Touch and hold the buttons “Temp” (19) and “Delay” (17) simultaneously for about 3 seconds until the display (2) shows ‘t19’.
4. Touch the Start/Pause button (4).

– The display shows the spin speed in real time. When the spin speed reaches a stable value, the calibration is complete and the appliance stops operating.
– If the display shows “255” or “0” instead: The calibration has failed. Check if any objects are left in the drum and start the calibration again.

5. Press the On/Off button (3) to switch the appliance off.

Troubleshooting table

Malfunctions can occur in all electrical appliances. This does not necessarily mean there is a defect in the appliance. For this reason, check the tables to see if you can correct the malfunction.

WARNING

Risk of electric shock!

- Never try to repair an appliance which is defective or presumed to be defective. You can put your own and future users' lives in danger. Only authorised specialists are allowed to carry out this repair work.

Wash result is not satisfactory		
Problem	Possible causes	Solutions, tips
Wash result is unsatisfactory/poor.	The water is too hard or there is not enough detergent.	Use the amount of detergent recommended by the manufacturer for the water hardness in your area.
	Too much laundry is in the drum.	Only load the drum with the maximum amount of laundry intended.
	Selected cycle is not right for the level of dirtiness of the laundry.	Select another wash cycle or adjust the level of soiling (see page EN-22 and page EN-16).
	Water temperature is too low.	Wash laundry at a higher water temperature, select another wash cycle or increase the water temperature (see page EN-22 and page EN-16).
	Stains have not been pre-treated.	Treat stains with ox-gall soap or stain remover if necessary.
Too much foam is created during the wash cycle.	Too much detergent was used.	Next time, use less detergent.
	The detergent is not suitable for washer-dryers.	Use detergent suitable for washer-dryers.
Fabric softener/fabric-care product was not dispensed.	Insert in fabric softener/starch compartment was not inserted properly or is clogged.	Remove insert and install it again properly; clean if necessary (see page EN-29).
Laundry is discoloured.	Laundry was washed at a temperature that was too hot.	Bleach laundry carefully if necessary.
	Coloured laundry items were added to the wash.	Sort laundry before washing (see page EN-25).

Wash result is not satisfactory		
Problem	Possible causes	Solutions, tips
Laundry has mould stains.	Damp and/or worn laundry was kept in the machine.	Remove mould stains carefully before the next wash, preferably with a special cleaner. Ask for advice at a chemist's.
Detergent residue on laundry.	Too much detergent used.	Use the amount of detergent recommended by the manufacturer for the water hardness in your area.
Colours of the laundry have faded.	Detergent contains bleaching agent.	Use colour freshener if necessary (available at chemist's). In future, use detergent without bleaching agent.
	Stain remover or similar was used.	

Malfunction		
Problem	Possible causes	Solutions, tips
Appliance does not work.	Mains plug is not sitting properly in the socket or is not plugged in.	Plug the mains plug into the socket properly.
	Socket has no voltage.	Check fuse; switch on if necessary.
	Fuse is not intact.	Replace fuse.
Wash cycle does not start.	The appliance door is not properly closed (Error code E30 in the display).	Close appliance door properly. (A "click" must be heard.)
	Cycle was not started.	Press ▶‖ button (4).
Appliance is not receiving water. (error code E10 on the display)	Valve is closed.	Open valve.
	Inlet hose is kinked.	Check inlet hose; dismantle if necessary and re-align.
	Inlet hose is clogged.	Clean filter on the inlet hose (see page EN-30).
	Filter on inlet is clogged.	Clean filter on inlet (see page EN-30).
Water is not being pumped. (Error code E03 on the display)	Outlet hose is clogged or kinked.	Check outlet hose; dismantle if necessary and re-align.
	The lint trap is clogged.	Clean lint trap (see page EN-31).

Malfunction		
Problem	Possible causes	Solutions, tips
Water is draining even though the appliance is not pumping.	Outlet hose is too low.	Place outlet hose higher.
Water is running out (appliance is “leaking”).	Inlet or outlet hose is not screwed on tightly enough.	Screw down inlet or outlet hose down tighter.
	Lint trap not closed properly.	Close lint trap properly (see page EN-31).
Appliance is unsteady or vibrating strongly.	Transport security device(s) wasn’t/weren’t removed.	Remove the transport safety device(s) (see page EN-33).
	Appliance was not installed or aligned properly.	Install or align appliance properly.
	The laundry in the drum is heavy or distributed unevenly.	Suspend the wash cycle and restart it to distribute the laundry more evenly.
Spin cycle is not running or is slow.	The imbalance correction system for imbalanced drum loads is running.	No error. Once the laundry is distributed evenly, the spin cycle starts automatically.
During the wash cycle, no water can be seen in the drum through the glass panel.	This is not an error. The water is at the bottom of the drum.	
The appliance door cannot be opened after the wash cycle has finished.	This is not an error. The opening mechanism contains a safety device that keeps the door closed another two minutes or so after the wash cycle has finished.	Press the ⏻ button (3) to switch the appliance off. Wait a few minutes, then open the appliance door.
The cycle duration displayed differs from the actual duration of the cycle.	This is not an error. The cycle duration is always adapted to the circumstances and re-calculated.	

Error code		
Error code	Possible causes	Solutions, tips
E30	The appliance door is not properly closed.	Properly close the door. A ‘click’ must be heard).
E10	Problem with the water inlet:	
	Valve is closed.	Open valve.
	Inlet hose is kinked.	Check inlet hose; dismantle if necessary and re-align.
	Inlet hose is clogged.	Clean filter on the inlet hose (see page EN-30).
	Filter on inlet is clogged.	Clean filter on inlet (see page EN-30).
E21	The water does not drain away.	Check whether the drainage hose is clogged or bent. Check whether the lint trap is clogged (see page EN-31).
E12	Too much water in the appliance.	Restart the appliance.
EHH	other causes	Restart the appliance. If problem the persists, contact the service department (see page EN-42)

Service

Please note!

You are responsible for the condition of the appliance and its proper use in the household.

If you call out for customer service because of an operating error, you will incur charges, even during the guarantee/warranty period.

Damage resulting from non-compliance with this manual unfortunately cannot be recognised.

In order for us to help you quickly, please tell us:

Name of appliance	Model	Colour	Order number
hanseatic Washer-dryer	HWDK86AD	White	74932819

Advice, complaints and orders

Please contact your mail order company's customer service centre if
- the delivery is incomplete,
- the appliance is damaged during transport,
- you have questions about your appliance,
- a malfunction cannot be rectified using the troubleshooting table,
- you would like to order further accessories.

You can find the contact details of your product advisor online on the service pages of your mail order company. The various sections of product advice are listed here.

Please have your appliance invoice ready.

For more information, visit www.hanseatic.de

Repairs and spare parts

You can prevent waste by having your defective appliances repaired. Please contact our Customer Service department.

Please have your appliance invoice ready (date of purchase and item no.).

Spare parts for your appliance are available for a minimum period of ten years after the last of the model has been placed on the market.

Customers in Germany

Place an order at
https://reparaturauftrag.operatec.eu
by E-mail: otto@operatec.de
Phone: +49 (0) 40 36 03 31 50

Customers in Austria

Please contact your mail order company's customer service centre or product advice centre.

Waste prevention, free return and disposal

Waste prevention

According to the provisions of Directive 2008/98/EC, waste prevention measures always take priority over waste management.

For electrical and electronic devices, waste prevention measures include extending the lifespan of defective devices through repair and reselling used working appliances instead of disposing of them.

Please help us reduce waste and contact our customer service if your product is faulty.

More information can be found in the brochure “Waste Prevention Programme – of the German Government with the Involvement of the Federal Länder”.

Free return of old electrical appliances

Upon purchasing a new electrical appliance of the same type with essentially the same function, consumers may return an old electrical appliance to a distributor obliged to take back old appliances, at no extra cost for the consumers. This option also exists for deliveries made to a private household. For distance selling, the option of having old electrical equipment collected for free applies only in the case of purchase of new electrical equipment with heat exchangers (e.g. refrigerators, dehumidifiers), screens and display devices with a screen surface > 100 cm², and large devices with at least one of its external dimensions measuring more than 50 cm.

In addition, consumers may return up to three old electrical appliances of the same type to a distributor’s collection point for free, without having to purchase a new electrical appliance. In this case, however, the old appliances’ external dimensions may not exceed 25 cm.

Disposal

Disposing of old electrical devices in an environmentally friendly manner

Electrical appliances contain harmful substances as well as valuable resources.

Every consumer is therefore required by law to dispose of old electrical appliances at an authorised collection or return point. They will thus be made available for environmentally-sound, resource-saving recycling.

You can dispose of old electrical appliances free of charge at your local recycling centre.

Please contact your dealer directly for more information about this topic.

Don’t forget to erase data!

If necessary, each consumer is responsible for erasing personal data from electrical and electronic equipment.

Batteries and rechargeable batteries, lamps and bulbs

If necessary, old single-use and rechargeable batteries that are not encased by an old electrical appliance, as well as lamps/bulbs that can be removed from an old electrical appliance without being destroyed, must be removed and disposed of separately before you return the appliance.

This symbol means that batteries and rechargeable batteries must not be disposed of with other household waste.

Consumers are required by law to bring all batteries and rechargeable batteries, regardless of whether they contain harmful substances*) or not, to a collection point operated by their communal authority or borough or to a retailer, so that they can be disposed of in an

environmentally friendly manner and so that valuable resources (e.g. cobalt, nickel or copper) can be recovered.

Batteries and rechargeable batteries can be returned free of charge.

Some of the possible contents (e.g. mercury, cadmium and lead) are toxic and, if improperly disposed of, can have adverse effects on the environment. Heavy metals, for instance, can have detrimental health effects on humans, animals and plants and accumulate in the environment and food chain, and then enter the body indirectly through the consumption of food.

There is a high risk of fire with old lithium batteries. Special care must therefore be taken to properly dispose of old lithium batteries and rechargeable batteries. Improper disposal can also lead to internal and external short circuits due to thermal effects (heat) or mechanical damage. A short circuit can lead to a fire or an explosion and have serious consequences for people and the environment. It is therefore important to tape off the poles of lithium batteries and rechargeable batteries before disposing of them to prevent an external short circuit.

Before disposing of the appliance, batteries and rechargeable batteries which are not permanently built into the appliance must be removed and disposed of separately.

Please only dispose of batteries and rechargeable batteries in a discharged state!

If possible, use rechargeable batteries in place of disposable batteries.

*) labelled with:
Cd = Cadmium, Hg = Mercury and
Pb = Lead

Packaging

Our packaging is made of environmentally friendly, recyclable materials:

- Outer packaging made of cardboard
- Moulded parts made of foamed, CFC-free polystyrene (PS)
- Films and bags made of polyethylene (PE)
- Tension bands made of polypropylene (PP)
- Saving energy also protects against excessive global warming. Your new appliance uses little energy due to its environmentally friendly insulation and technology.

If you have sufficient space, we recommend keeping the packaging, at least during the warranty period. If the appliance needs to be sent out for repairs, only the original packaging will provide sufficient protection.

If you would like to dispose of the packaging, please dispose of it in an environmentally friendly way.

Apendix

Product fiche concerning Regulation (EU) No 2019/2014

The product fiche for your device is available online.

Go to https://eprel.ec.europa.eu and enter the model identifier of your device to access the product fiche.

The model Identifier of your device can be found under Technical specifications.

Technical specifications

Item number	74932819
Model identifier	HWDK86AD
Supply voltage / frequency / fuse	220 - 240 V / 50 Hz / 10 A
Rated power	1900 W
Device measurements (Height × Width × Depth)	85,0 cm × 60,0 cm × 48,0 cm
Unloaded weight	63 kg
Water pressure	0,05–1,0 MPa / 0,5–10 bar bar
Off-mode	0,50 W
Standby mode	- W
Delay start	4,00 W
Networked standby	- W