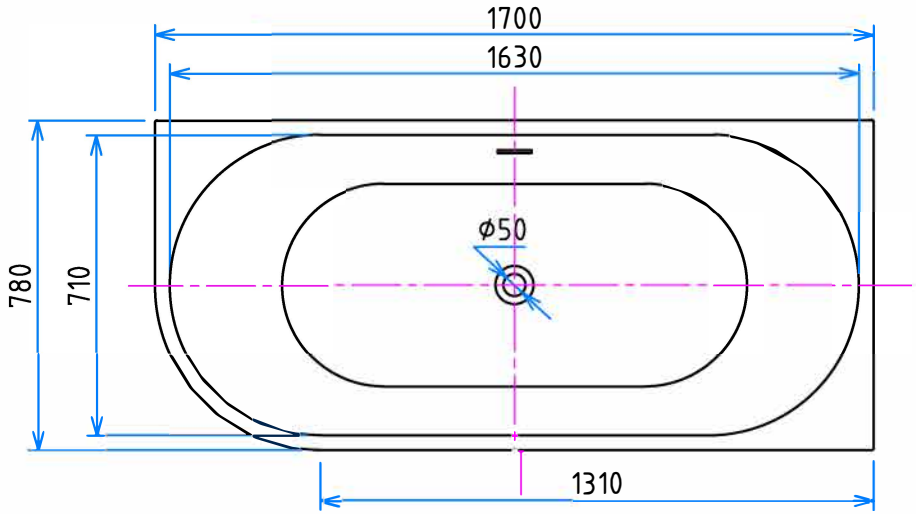

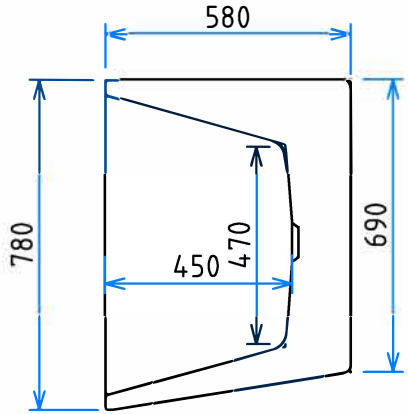

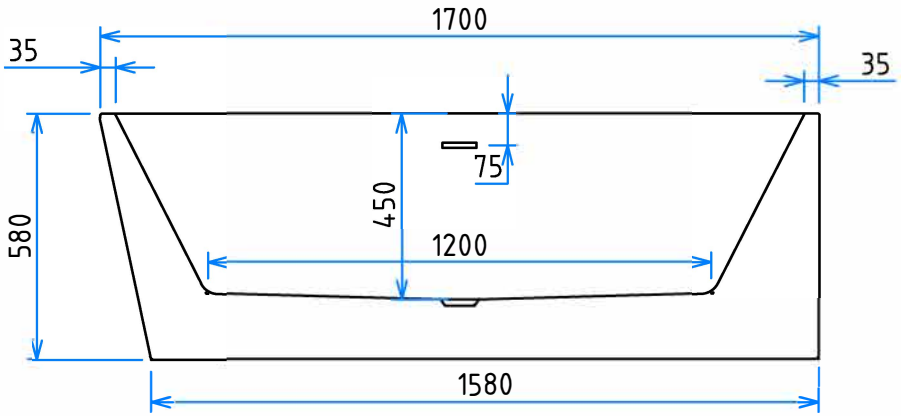

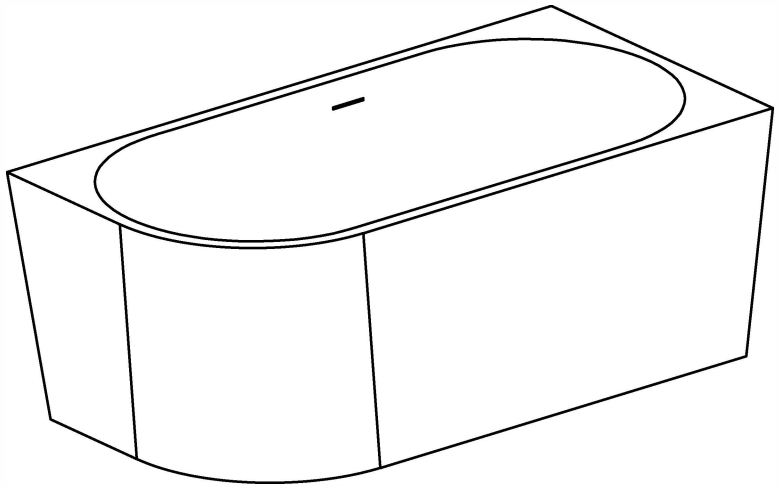

Model:BV-FB1204

Size:1700*780*580mm