Villeroy & Boch
1748

General Instruction

General Instruction
Villeroy & Boch

SupraFix 3.0
Villeroy & Boch

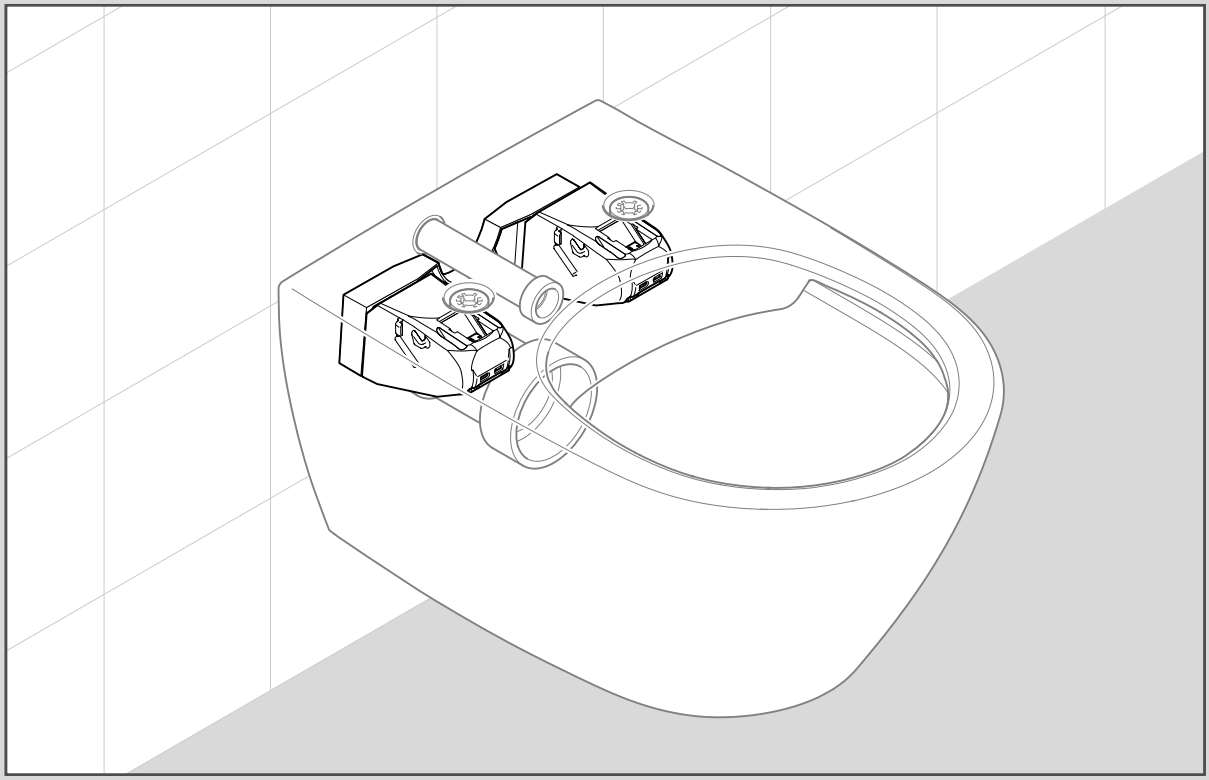

DE Montageanleitung
WC, Suprafix 3.0 Befestigung

EN Installation Instructions
WC, Suprafix 3.0 fixation

FR Instructions de montage
WC, fixation Suprafix 3.0

IT Instruzioni di montaggio
WC, fissaggio Suprafix 3.0

ES Instrucciones de montaje
Inodoro, fijación Suprafix 3.0

NL Montage-instructie
WC, bevestiging Suprafix 3.0

ZH 装配说明
马桶，Suprafix 3.0 快速安装

RU Инструкция по монтажу
Унитаз, крепление Suprafix 3.0

VILLEROY-BOCH.COM

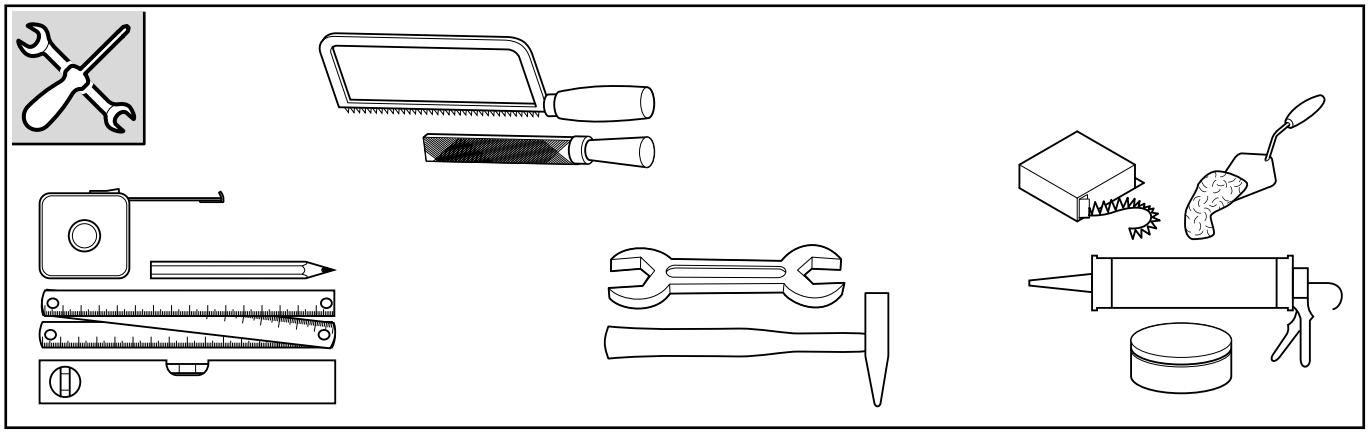

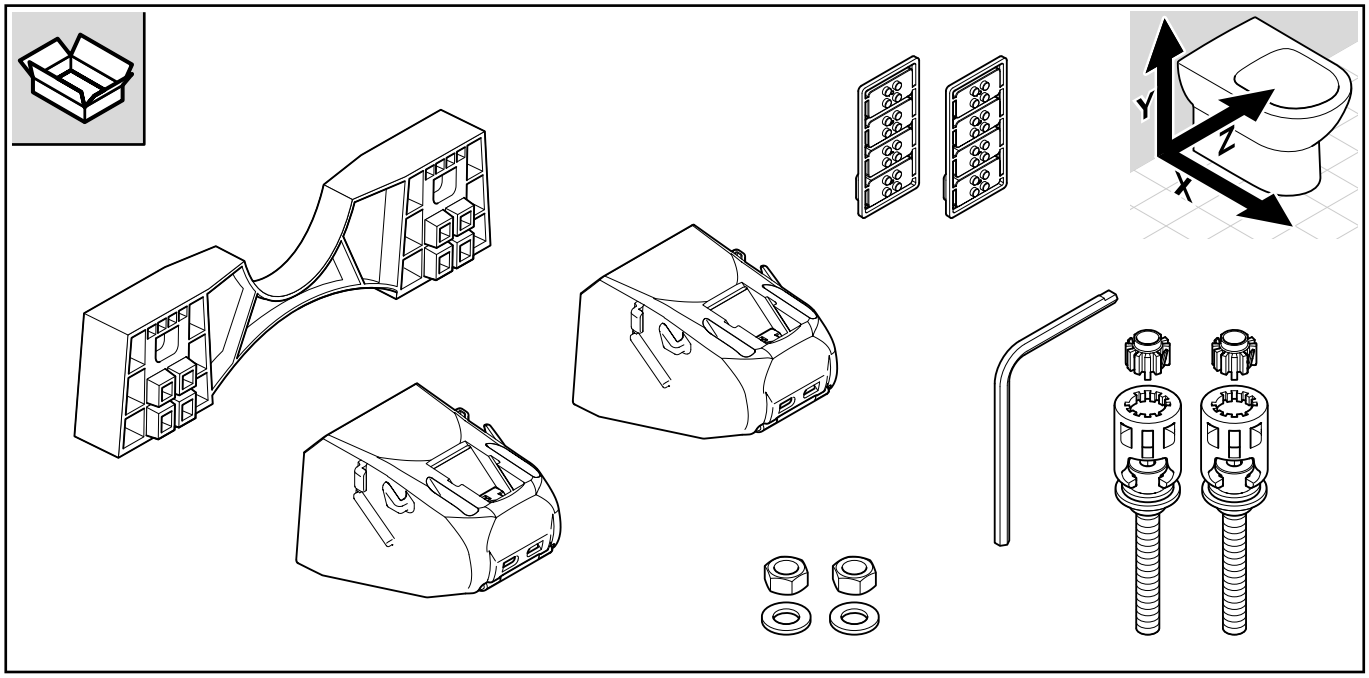
Y
Z
X

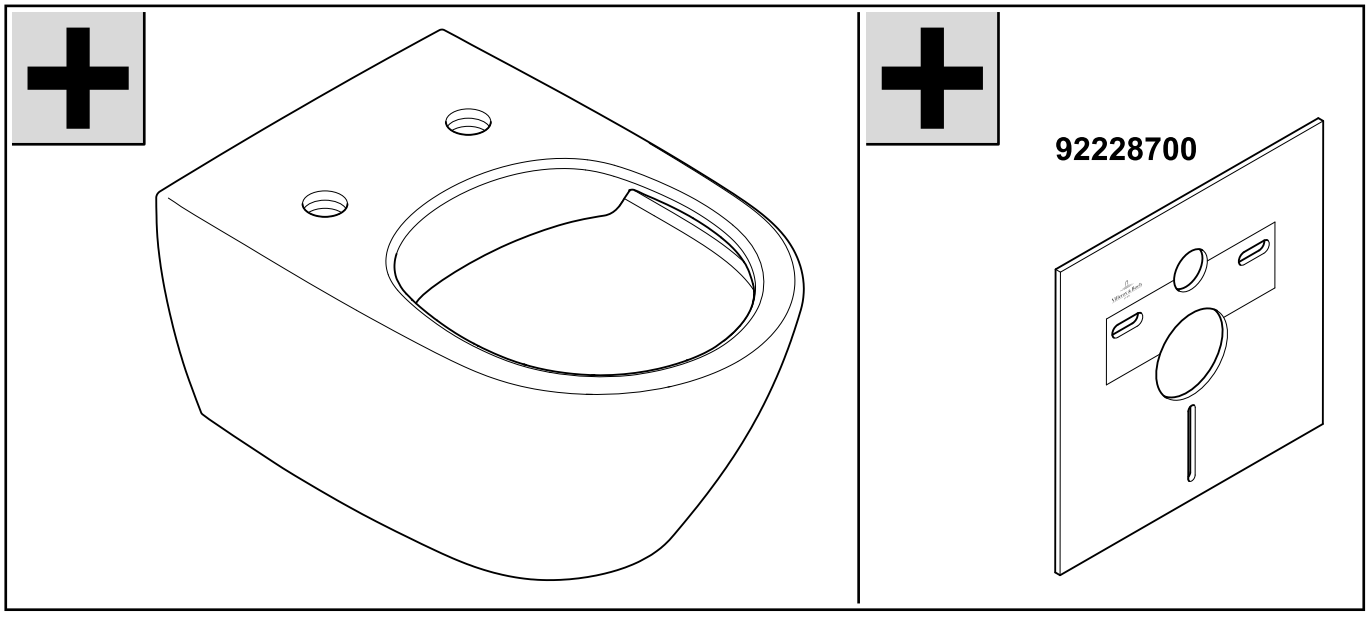
92228700

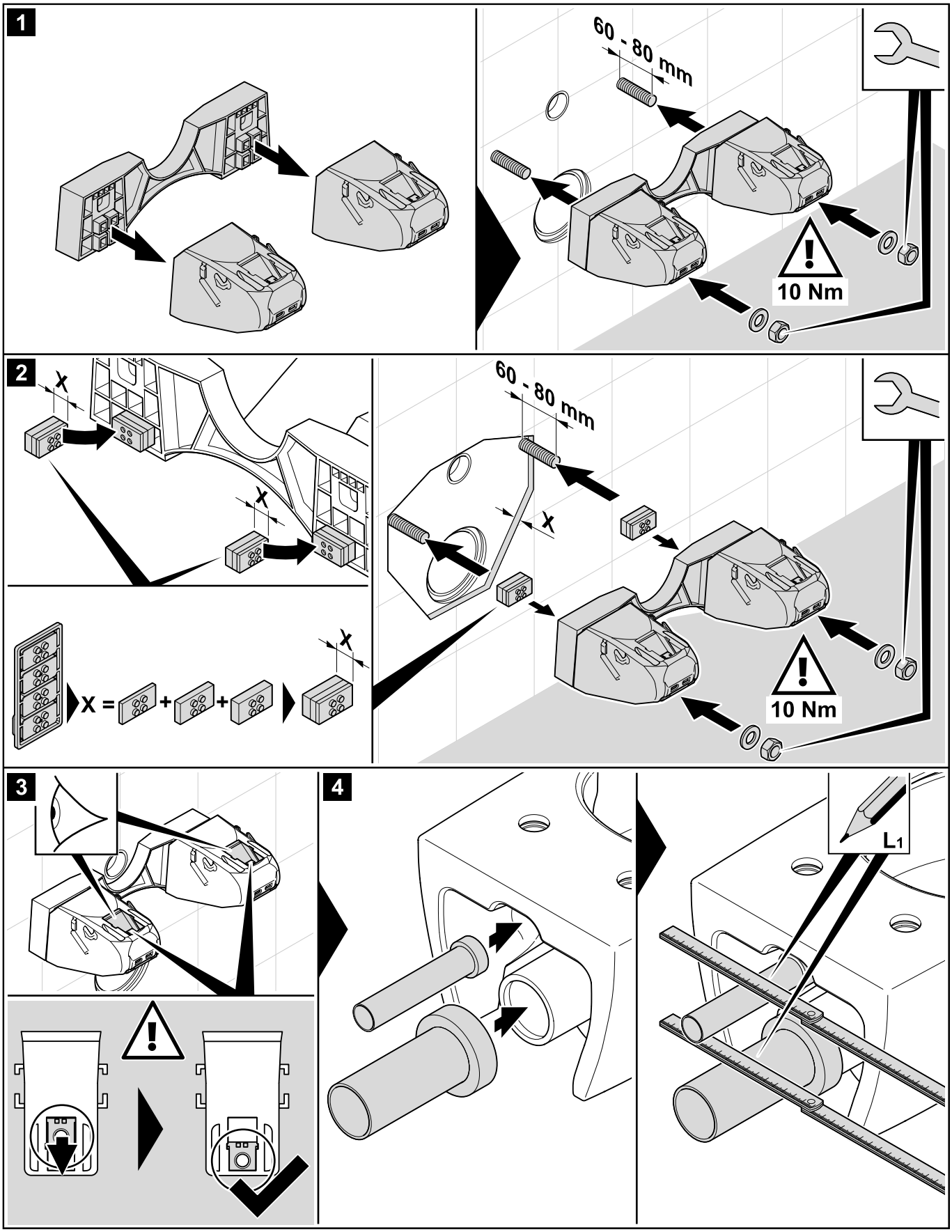
1
60 - 80 mm
10 Nm
2
X
X
60 - 80 mm
X
10 Nm
X =
3
4
L1

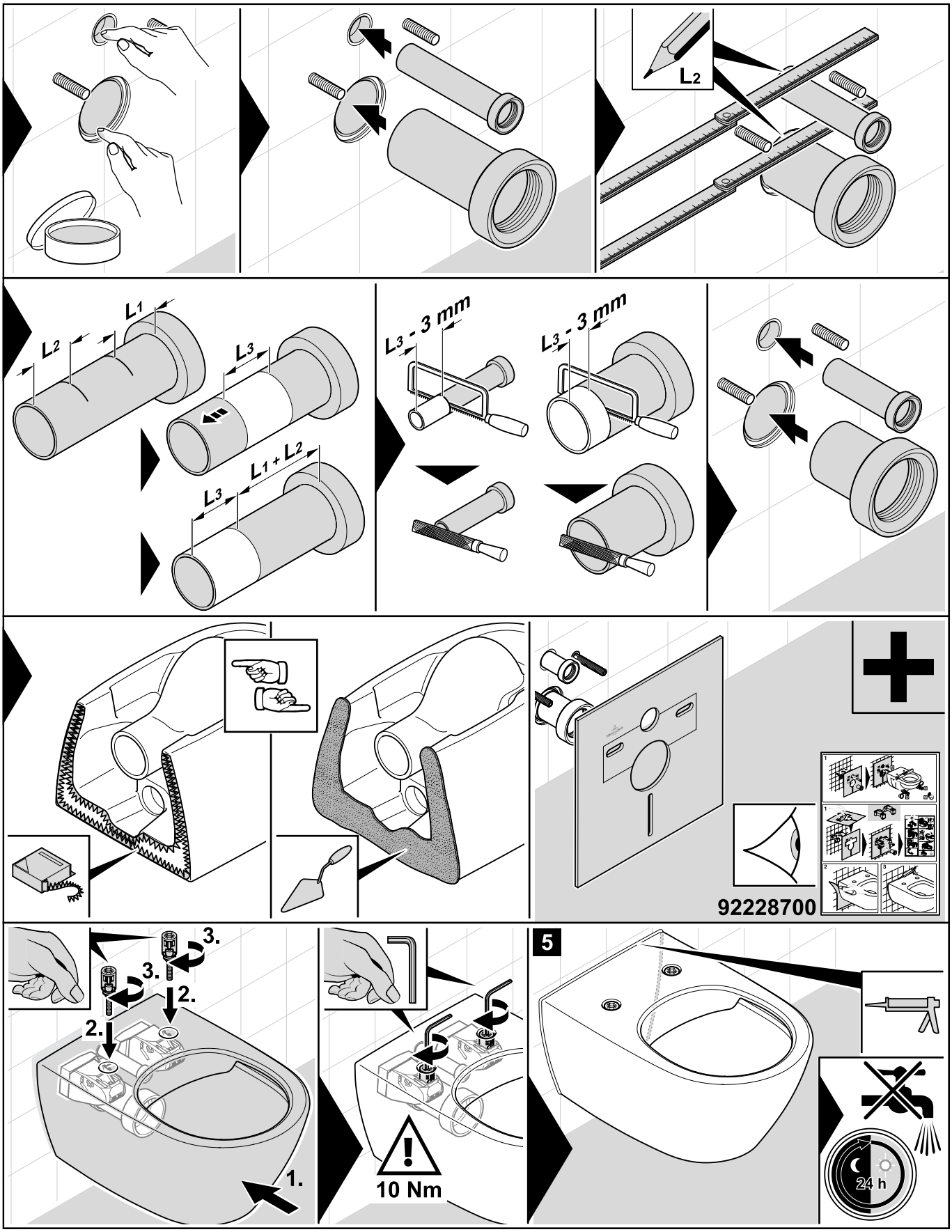
L2
L1
L2
L3
L1 + L2
L3
L3 - 3 mm
L3 - 3 mm
92228700
3.
3.
2.
2.
1.
10 Nm
5
24 h