Art.-Nr.:DD-5Q-H
DD-5Q-Y

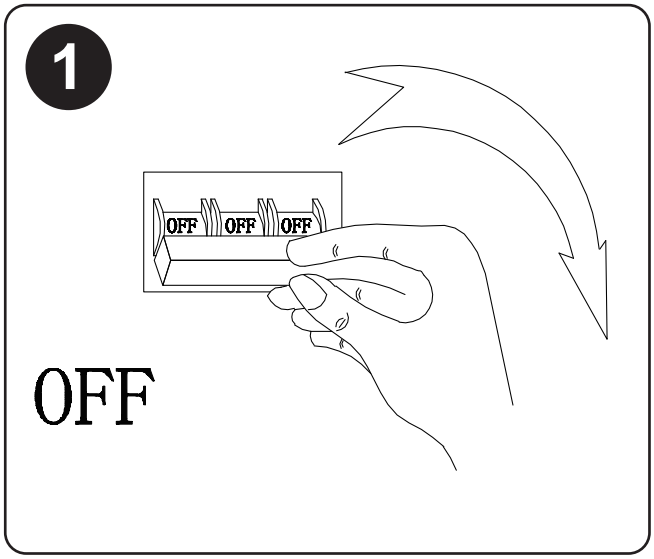

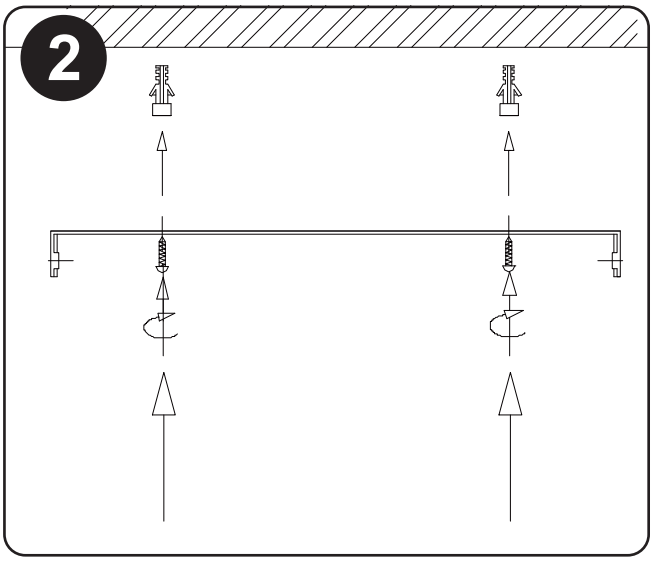

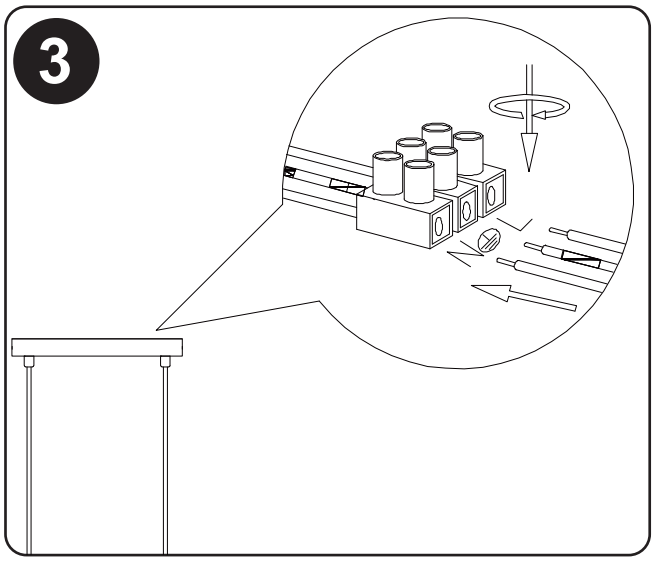

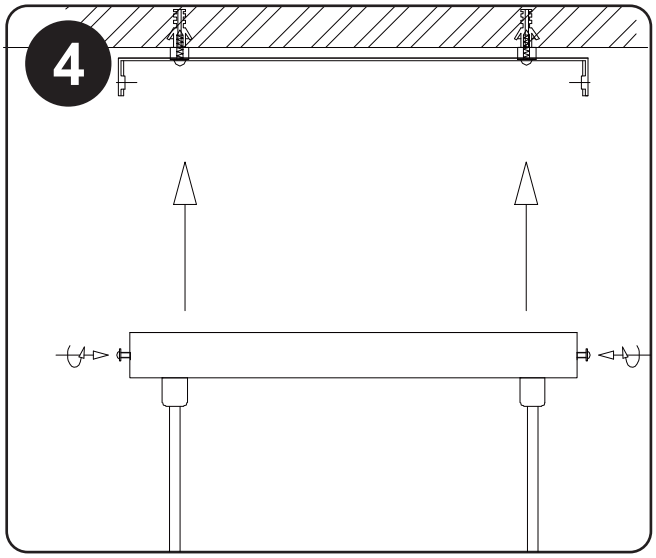

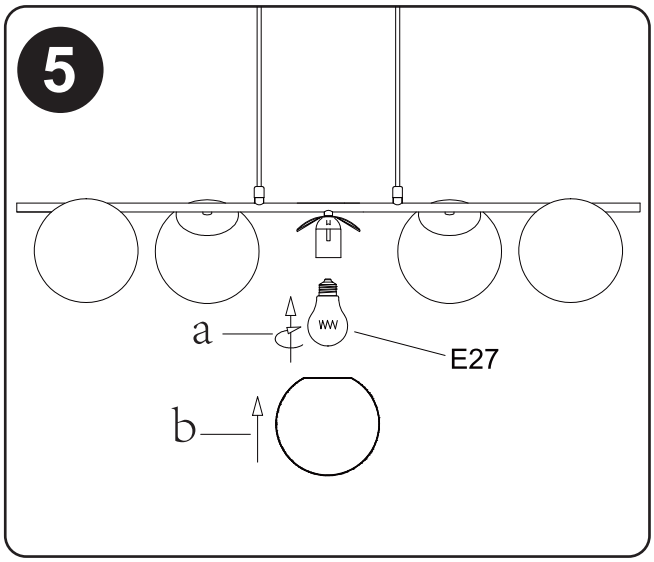

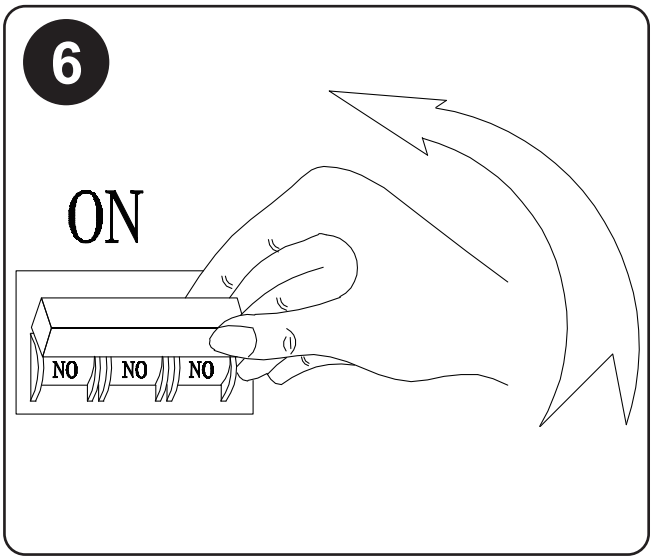

220~240VAC 50/60Hz